Volume 3

ASCS CLASS

ASIA SHIPPING CERTIFICATION SERVICES

ASCS CLASS

ASIA SHIPPING CERTIFICATION SERVICES

MACHINERYINSTALLATIONS

VOLUME III

Copyright ©2016
Asia Shipping Certification Services
ASCS CLASS

CHAPTER 1: GENERAL PROVISIONS

1.1 GENERAL REQUIREMENTS 1

1.1.1 APPLICATION 1

1.1.2 PLANS AND DOCUMENTS 1

1.1.3 AMBIENT CONDITIONS 1

1.1.4 VIBRATION 2

1.1.5 STRENGTHERING FOR NAVIGATION IN ICE 2

1.1.6 ASTERN POWER 3

1.1.7 POWER CONDITIONS FOR GENERATING SETS 3

1.1.8 AVAILABILITY OF MACHINERY 3

1.1.9 AUTOMATION OF MACHINERY INSTALLATIONS 3

1.1.10 MATERIALS 4

1.1.11 FUEL 4

1.1.12 CONSTRUCTION SURVEY OF MACHINERY 4

1.1.13 TRIALS 5

1.2 ARRANGEMENT OF MACHINERY SPACES 5

1.2.1 DOORWAYS AND ESCAPES 5

1.2.2 BOILER- ARRANGEMENT 5

1.2.3 SKYLIGHTS OF MACHINERY CASINGS 6

1.2.4 VENTILATION 6

1.2.5 CORROSION PROTECTION 6

1.2.6 PROTECTION 6

1.2.7 COMMUNICATION 7

1.2.8 ACCESSIBILITY 7

1.2.9 STUFFING BOXES FOR SHAFTINGS 7

1.2.10 HOISTING APPLIANCES 7

1.2.11 SECURING OF SPARE PARTS 7

1.2.12 LOCATION OF EMERGENCY INSTALLATIONS IN PASSENGER SHIPS 7

CHAPTER 2: PUMPING AND PIPING SYSTEMS

2.1 GENERAL REQUIREMENTS 8

2.1.1 APPLICATION 8

2.1.2 PLANS AND DOCUMENTS 8

2.1.3 DESIGN PRESSURE 9

2.1.4 DESIGN TEMPERATURE 9

2.1.5 CLASSES OF PIPES 10

2.1.6 PIPING ARRANGEMENTS AND SEPARATION OF TANKS 10

2.1.7 CORROSION PROTECTION 11

2.1.8 FIRE PROTECTION 11

2.1.9 PROTECTION 11

2.1.10 INSULATION 12

2.1.11 COMPENSATION FOR EXPANSION AND HEAT TREATMENT 12

2.1.12 MATERIALS AND NON-DESTRUCTIVE TESTING 13

2.1.13 SPARE PARTS 14

2.1.14 MISCELLANEOUS 14

2.1.15 VALVES AND FITTINGS IN PIPING SYSTEMS 14

2.2 CARBON AND LOW ALLOY STEELS 14

2.2.1 CARBON AND LOW ALLOY STEEL PIPES, VALVES AND FITTINGS 14

2.2.2 CALCULATION OF WALL THICKNESS 14

2.2.3 CONNECTION OF PIPE LENGTHS 18

2.2.4 FLANGE CONNECTIONS 20

2.3 COPPER AND COPPER ALLOYS 21

2.3.1 COPPER AND COPPER ALLOY PIPES, VALVES AND FITTINGS 21

2.3.2 CALCULATION OF WALL THICKNESS 22

2.4 OTHER MATERIALS 24

2.4.1 GREY CAST IRON PIPES, VALVES AND FITTINGS 24

2.4.2 NODULAR GRAPHITE CAST IRON PIPES, VALVES AND FITTINGS 24

2.4.3 PLASTIC PIPES 25

2.4.4 FLEXIBLE HOSES 25

APPENDIX 1: PRODUCTION AND APPLICATION OF PLASTIC PIPES ON SHIPS

1.1 TERMS AND DEFINITIONS 26

1.2 SCOPE 26

1.3 GENERAL REQUIREMENTS 26

1.3.1 STRENGTH 26

1.3.2 AXIAL STRENGTH 27

1.3.3 IMPACT RESISTANCE 27

1.3.4 TEMPERATURE 27

1.4 REQUIREMENTS FOR PIPES/PIPING SYSTEM DEPENDING ON SERVICE AND/OR LOCATIONS 28

1.5 MATERIAL APPROVAL AND QUALITY DURING MANUFACTURE 29

1.6 INSTALLATION 31

1.6.1 SUPPORTS 31

1.6.2 EXPANSION 32

1.6.3 EXTERNAL LOADS 32

1.6.4 STRENGTH OF CONNECTIONS 32

1 .6.5 INSTALLATION OF CONDUCTIVE PIPES 32

1.6.6 APPLICATION OF FIRE PROTECTION COATINGS 33

1.6.7 PENETRATION OF DIVISIONS 33

1.6.8 CONTROL DURING INSTALLATION 33

1.6.9 BONDING PROCEDURE QUALITY TESTING 34

1.6.10 TESTING AFTER INSTALLATION ON BOARD 34

2.5 HYDRAULIC AND TIGHTNIBS TESTS 34

2.5.1 TESTS BEFORE INSTALLATION ON BOARD 34

2.5.2 TESTING AFTER ASSEMBLY ON BOARD 35

2.5.3 HYDRAULIC TESTS FOR PUMPS, VALVES AND FITTINGS 36

CHAPTER 3: SHIP' S PIPING AND VENTILATING SYSTEMS

3.1 GENERAL REQUERIMENTS 37

3 .1.1 APPLICATION 37

3.1.2 MATERIALS 37

3.1.3 VALVE 37

3.1.4 SHIP-SIDE VALVES AND FITTINGS (OTHER THAN THOSE ON SCUPPERS AND SANITARY DISCHARGES) 38

3.1.5 MISCELLANEOUS 39

3.2 DRAINAGE OF COMPARTMENTS, OTHER THAN MACHINERY SPACES 39

3.2.1 GENERAL REQUIREMENTS 39

3.2.2 CARGO HOLDS 39

3.2.3 HOLDS AND DEEP TANKS FOR ALTERNATIVE CARRIAGE OF LIQUID OR DRY CARGO 40

3.2.4 FORE PEAKS, ALTER PEAKS AND COFFERDAMS 40

3.2.5 SPACES ABOVE FORE PEAKS, AFTER PEAKS AND MACHINERY SPACES 41

3.2.6 SHATT TUNNEL AND PIPE TUNNEL 41

3.3 BILGE DRAINAGE OF MACHINERY SPACE 41

3.3.1 GENERAL REQUIREMENTS 41

3.3.2 BILGE SUCTION ARRANGEMENTS IN MACHINERY SPACES 42

3.3.3 EMERGENCY BILGE SUCTIONS OF MACHINERY SPACES 43

3.4 BILGE PUMPS AND BILGE PIPING 43

3.4.1 NUMBER OF BILGE PUMPS 43

3.4.2 TYPE AND CAPACITY OF BILGE PUMPS 44

3.4.3 BILGE PIPE SYSTEMS 45

3.4.4 BILGE PUMPS AND PIPE CONNECTIONS 46

3.4.5 NON-RETURN ARRANGEMENTS 46

3.4.6 BLANKING ARRANGEMENTS 46

3.4.7 BILGE PIPES IN WAY OF DEEP TANKS AND DOUBLE BOTTOM TANKS 47

3.4.8 BILGE LINING 47

3.4.9 MISCELLANEOUS 47

3.5 ADDITIONAL REQUIREMENTS FOR BILGE DRAINAGE FOR PASSANGER SHIPS 48

3.5.1 ARRANGEMENT OF BILGE PUMPS AND BILGE MAIN 48

3.5.2 ARRANGEMENT OF BILGE PIPES 48

3.6 ADDITIONAL REQUIREMENTS FOR BIDGE DRAINAGE FOR OIL TANKERS, SHIPS CARRYING DANGEROUS GOODS, SPECIAL CATEGORY SPACES BELOW THE BULKDECK AND PERIODICALLY UNATTENDED MACHINERY SPACES 49

3.6.1 ADDITIONAL REQUIREMENTS FOR BILGE DRAINAGE FOR OIL TANKERS 49

3.6.2 ADDITIONAL REQUIREMENTS FOR BILGE DRAINAGE FOR STRIPS CARRYING DANGEROUS GOODS 49

3.6.3 ADDITIONAL REQUIREMENTS FOR BILGE DRAINAGE FOR SPECIAL CATEGORY SPACES BELOW ME BULKHEAD DECK 49

3.6.4 ADDITIONAL REQUIREMENTS FOR BILGE DRAINAGE FOR PERIODICALLY UNATTENDED MACHINERY SPACES 50

3.7 DRAINAGE ARRANGEMENTS FOR NON-SELF-PROPELLED SHIPS 50

3.7.1 HAND PUMPS 50

3.7.2 SHIPS WITH AUXILIARY POWER 50

3.8 BALLAST AND SCUPPER SYSTEMS 51

3.8.1 BALLAST PIPING 51

3.8.2 SCUPPER AND SANITARY DISCHARGES 51

3.9 REMOTELY CONTROLLED BILGE AND BALLAST SYSTEMS 52

3.9.1 ARRANGEMENT 52

3.9.2 VALVES 52

3.9.3 PUMPS 52

3.10 AIR, OVERFLOW AND SOUNDING PIPES 52

3.10.1 GENERAL REQUIREMENTS 52

3.10.2 ARRANGEMENT OF AIR PIPES 52

3.10.3 TERMINATION OF AIR PIPES 53

3.10.4 SIZE OF AIR PIPES 54

3.10.5 ARRANGEMENT OF OVER FLOW PIPES 54

3.10.6 SIZE OF OVERFLOW PIPES 55

3.10.7 PREVENTION OF CROSS FLOW THROUGH THE OVERFLOW PIPES 55

3.10.8 SOUNDING PIPES 55

3.10.9 SHORT SOUNDING PIPES 56

3 .10.10 SIZE OF SOUNDING PIPES 57

3.11 VENTILATION 57

3.11.1 GENERAL REQUIREMENTS 57

3.11.2 VENTILATORS 57

3.11.3 VENTILATOR COWLS 58

3.12 MEANS OF DETECTION OF WA TER INGRESS INTO CARGO HOLDS 58

3.12.1 APPLICATION 58

3.12.2 PLANS AND DOCUMENTS 58

3.12.3 GENERAL REQUIREMENTS 58

3.12.4 METHOD OF DETECTION 59

3.12.5 ALARMS 59

3.12.6 INSTALLATION 59

CHAPTER 4 MACHINERY PIPING SYSTEMS

4.1 GENERAL REQUIREMENTS 59

4.1.1 APPLICATION 59

4.2 OIL FUEL SYSTEMS 59

4.2.1 GENERAL REQUIREMENTS 59

4.2.2 BOILER UPTAKE ARRANGEMENT 60

4.2.3 OIL BURNING UNITS OF BOILERS 61

4.2.4 OIL FUEL PUMPS AND FILTERS 62

4.2.5 OIL FUEL PIPING 63

4.2.6 OIL FUEL ARRANGEMENTS AND OIL FUEL TANKS 64

4.2.7 FILLING PIPING 65

4.2.8 OIL FIRED GALLEYS 66

4.2.9 OIL FUEL (LUBRICATING OIL) HEATING 66

4.2.10 ALTERNATIVE CARRIAGE OF OIL FUEL AND WATER BALLAST 67

4.2.11 DEEP TANKS FOR THE ALTERATIVE CARRIAGE OF OIL, WATER BALLAST OR DRY CARGO 67

4.2.12 SEPARATION OF CARGO OILS FROM OIL FUEL 68

4.2.13 ARRANGEMENTS FOR OTHER FLAMMABLE OILS 68

4.3 STEAM PIPING SYSTEMS 68

4.3.1 ARRANGEMENT 68

4.3.2 CONDENSATE DRAINAGE 68

4.3.3 REDUCED PRESSURE LINES 69

4.3.4 THERMAL EXPANSION STRESSES 69

4.4 FEED, BLOW-OFF AND CONDENSATE SYSTEMS 69

4.4.1 FEED PUMPS 69

4.4.2 FEED PIPING 69

4.4.3 RESERVE FEED WATER 70

4.4.4 CONDENSATE PUMPS 70

4.4.5 BLOW-OFF PIPING 70

4.5 COOLING WATER SYSTEMS 70

4.5.1 COOLING WATER PUMPS 70

4.5.2 PIPING AND FITTING 71

4.6 LUBRICATING OIL SY SYSTEM 71

4.6.1 LUBRICATING OIL PIMPS 71

4.6.2 PIPING AND FITTING 72

4.6.3 ADDITIONAL REQUIREMENTS FOR LUBRICATING OIL SYSTEM OF MAIN TURBINES AND MAIN TURBO-GENERATORS 72

4.6.4 LUBRICATING OIL ARRANGEMENTS AND LUBRICATING OIL TANKS 73

4.7 HYDRAULIC TRANSMISSION PIPING SYSTEMS 74

4.7.1 MATERIALS 74

4.7.2 PIPING 74

4.7.3 ARRANGEMENT 75

4.8 THERMAL OIL SYSTEM 75

4.8.1 GENERAL REQUIREMENTS 75

4.8.2 PLANS AND DOCUMENTS 75

4.8.3 DESIGN AND MANUFACTURE 75

4.8.4 ARRANGEMENT 77

4.8.5 ADDITIONAL REQUIREMENTS FOR EXHAUST-TIRED THERMAL OIL HEATERS 78

4.8.6 TESTING 78

4.9 REQUIREMENTS CONCERNING USE OF CRUDE OIL OR SLOPS AS FUEL FOR TANKER BOILERS 78

4.9.1 GENERAL REQUIREMENTS 78

4.9.2 ARRANGEMENT 79

4.9.3 OTHER REQUIREMENTS 80

4.10 EXHAUST PIPELINE 82

4.10.1 ARRANGEMENT 82

4.10.2 SILENCERS 82

4.10.3 WATER HEATERS 82

CHARPTER 5 PIPING SYSTEM FOR OIL TANKERS

5.1 GENERAL REQUIREMENTS 83

5.1.1 APPLICATION 83

5.1.2 ARRANGEMENTS OF DANGEROUS SPACES 83

5.1.3 STEAM CONNECTIONS TO CARGO TANKS 83

5.1.4 CARGO PUMP ROOM 83

5.1.5 SLOP TANKS 84

5.1.6 CARGO TANK LEVEL SOUNDING DEVICES 84

5.1.7 AIR AND SOUNDING PIPES FOR COFFERDAMS 84

5.1.8 CARGO OIL HEATING SYSTEM 85

5.1.9 GAS FLEEING EQUIPMENT 85

5.1.10 EARTHING OF CARGO OIL PIPES 85

5.1.11 FREE OF SPARK 85

5.1.12 DECK SPRAYING PIPES 85

5.2 CARGO HANDLING SYSTEM 86

5.2.1 GENERAL REQUIREMENTS 86

5.2.2 CARGO PUMPS 86

5.2.3 CARGO PIPING SYSTEM 87

5.2.4 REMOTE CONTROL VALVES 88

5.3 PIPING SYSTEMS FOR BILGE, BALLAST AND OIL FUEL 89

5.3.1 PUMPING ARRANGEMENTS AT ENDS OF SHIPS OUTSIDE RANGES OF CARGO TANKS 89

5.3.2 CARGO PUMP ROOM DRAINAGE 89

5.3.3 COFFERDAM DRAINAGE WITHIN THE RANGES OF CARGO TANKS 90

5.3.4 BALLAST PIPING WITHIN THE RANGE OF THE CARGO TANKS 90

5.4 CARGO TANK VENTING ARRANGEMENTS 91

5.4.1 GENERAL REQUIREMENTS 91

5.4.2 PRESSURE/VACUUM AND VENTING SYSTEMS 92

5.4.3 ARRANGEMENT OF VAPOUR OUTLETS 93

5.4.4 HEIGHT AND LOCATION OF CARGO TANK VENT OUTLETS 93

5.5 REQUIREMENTS FOR DOUBLE HULL SPACES OF OIL TANKERS

5.5.1 INERTING, VENTILATION AND GASMEASUREMENT OF DOUBLE HULL SPACES 93

5.6 REQUIREMENTS FOR OIL TANKERS INTENDED FOR CARRIAGE OF CARGO OIL HAVING A FLASH POINT EXCEEDING 60 °C 94

5.6.1 GENERAL REQUIREMENTS 94

5.6.2 VENT PIPES OF CARGO TANKS 94

CHAPTER 6 BOILERS AND PRESSURE VESSELS

6.1 GENERAL REQUIREMENTS 95

6.1.1 APPLICATION 95

6.1.2 CLASSIFICATION 95

6.1.3 DESIGN PRESSURE 96

6.1.4 METAL TEMPERATURE 96

6.1.5 PLANS AND DOCUMENTS 97

6.1.6 MATERIALS 97

6.1.7 PLATE CUTTING 97

6.1.8 FORMING 98

6.1.9 ALLOWABLE STRESS 98

6.1.10 JOINT FACTOR OF WELDED SEAM 98

6.1.11 WELDING AND HEAT TREATMENT 99

6.1.12 MISCELLANEOUS 99

6.2 WATER TUBE BOILERS 100

6.2.1 CYLINDRICAL SHELLS 100

6.2.2	STRENGTH FACTOR OF CYLINDRICAL OF SHELL	100
6.2.3	COMPENSATING EFFECT OF TUBE STUBS	104
6.2.4	SPHERICAL SHELLS	105
6.2.5	DISHED ENDS	106
6.2.6	CONICAL ENDS SUBJECT TO INTERNAL PRESSURE	109
6.2.7	HEADERS	112
6.2.8	FLAT END PLATES	114
6.2.9	BOILER TUBS SUBJECT TO INTERNAL PRESSURE	116
6.3	**HORIZONTAL SMOKE TUBE BOILERS**	117
6.3.1	CYLINDRICAL SHELL	117
6.3.2	STAYED FLAT SURFACES	117
6.3.3	POINT OF SUPPORT	121
6.3.4	PLAIN SMOKE TUBES	121
6.3.5	STAY TUBES	122
6.3.6	STAYS	123
6.3.7	FURNACES	124
6.3.8	CROWN PLATES AND GIRDERS OF COMBUSTION CHAMBERS	126
6.4	**VERTICAL AUXILIARY BOILERS**	127
6.4.1	CYLINDRICAL SHELL	127
6.4.2	DISHED END PLATES SUBJECT TO INTERNAL PRESSURE	127

6.4.3 FLAT CROWNS 128

6.4.4 TUBE PLATES 128

6.4.5 HORIZONTAL SHELVES OF TUBE PLATES 128

6.4.6 HEMISPHERICAL FURNACES 130

6.4.8 OGEE RINGS 131

6.5 BOILER MOUNTINGS AND FITTINGS 133

6.5.1 GENERAL REQUIREMENTS 133

6.5.2 FEED CHECK VALVES 133

6.5.3 FEED STAND PIPES AND INTERNAL PIPES 134

6.5.4 WATER LEVEL INDICATORS AND LEVELS OF THE HIGHEST HEATING SURFACES 134

6.5.5 SAFETY VALVES 135

6.5.6 STOP VALVES 137

6.5.7 BLOW-OFF AND SCUM VALVES 138

6.5.8 PRESSURE GAUGES 138

6.5.9 SAMPLING VALVE OR COCK 138

6.5.10 AIR COCKS 139

6.5.11 SUPERHEATER MOUNTINGS 139

6.6 PRESSURE VESSELS 139

6.7 PADS AND STANDPIPES 140

6.7.1 PADS 140

6.7.2 STANDPIPES 140

6.8 OPENINGS AND COMPENSATION 141

6.8.1 CYLINDRICAL SHELLS 141

6.8.2 DISHED END PLAINS 143

6.9 CONSTRUCTION 146

6.9.1 ACCESS ARRANGEMENTS 146

6.9.2 STRUCTURE ATTACHMENT 147

6.9.3 FITTING OF TUBES IN WATER TUBE BOILERS 149

6.10 HYDRAULIC TESTS 150

6.10.1 GENERAL REQUIREMENTS 150

CHAPTER 7: STEAM TURBINES

7.1 GENERAL REQUIREMENTS 152

7.1.1 APPLICATION 152

7.1.2 PLANS AND DOCUMENTS 152

7.1.3 CRITICAL SPEED 152

7.1.4 ASTERN TURBINES 152

7.1.5 INDICATORS FOR MOVEMENT 153

7.1.6 TESTING OF MATERIALS 153

7.1.7 NON-DESTRUCTIVE TESTING 153

7.2 ROTORS 153

7.2.1 CONSTRUCTION 153

7.2.2 TESTING 154

7.3 STATORS 154

7.3.1 CONSTRUCTION 154

7.3.2 BEARING 154

7.4 SAFETY ARRANGEMENTS 155

7.4.1 OVERSPEED PROTECTIVE DEVICES 155

7.4.2 LOW PRESSURE PROTECTIVE DEVICES FOR LUBRICATING OIL 155

7.4.3 SPEED GOVERNORS 155

7.4.4 PROTECTIVE DEVICES FOR AXIAL DISPLACEMENT 156

7.4.5 GLAND SEALING AND CONDENSATE SYSTEMS 156

7.4.6 SAFETY DEVICES FOR MANOEUVRING 156

7.4.7 ALARM DEVICES 156

7.4.8 EMERGENCY ARRANGEMENTS 157

7.5 HYDRAULIC TESIS 157

7.5.1 TEST PRESSURE 157

CHAPTER 8: GAS TURBINES

8.1 GENERAL REQUIREMENTS 158

8.1.1 APPLICATION 158

8.1.2 RATING 158

8.1.3 CORRECTION CURVES 158

8.1.4 ASTERN RUNNING 158

8.1.5 MISCELLANEOUS 158

8.1.6 PLANS AND DOCUMENTS 158

8.2 MATERIALS 159

8.2.1 GENERAL REQUIREMENTS 159

8.2.2 HIGH TEMPERATURE PROPERTIES 159

8.2.3 TESTING OF MATERIALS 159

8.2.4 NON-DESTRUCTIVE TESTING 160

8.3 DESIGN AND CONSTRUCTION 160

8.3.1 GENERAL REQUIREMENTS 160

8.3.2 STRESS ANALYSIS 160

8.3.3 VIBRATION 160

8.3.4 AIR INLET AND EXHAUST GAS SYSTEMS 160

8.3.5 FUEL AND SALT DEPOSITS 160

8.3.6 TURNING GEAR 161

8.3.7 STARTING SYSTEM 161

8.3.8 INSPECTION OPENINGS 161

8.3.9 INSTRUMENTATION 161

8.3.10 INSTALLATION 161

8.3.11 SPARE PARTS 162

8.4 SAFETY ARRANGEMENTS 162

8.4.1 OVERSPEED PROTECTION 162

8.4.2 SPEED GOVERNORS 162

8.4.3 LOW OIL PRESSURE PROTECTION 162

8.4.4 HIGH GAS TEMPERATURE ALARM 162

8.4.5 FLAME FAILURE PROTECTION 163

8.4.6 HIGH TEMPERATURE PROTECTION FOR BEARING 163

8.4.7 HAND TRIP GEAR 163

8.4.8 TEMPERATURE CONTROLS 163

8.5 TEST 163

8.5.1 BALANCE TEST 163

8.5.2 HYDRAULIC TESTS 163

8.5.3 OVERSPEED TESTS 164

8.5.4 SHIP TRIALS 164

CHAPTER 9: DIESEL ENGINES

9.1 GENERAL REQUIREMENTS 164

9.1.1 APPLICATIONS 164

9.1.2 RATING 164

9.1.3 ASTERN 164

9.1.5	INIMUM STEADY SPEED	165
9.1.6	MANOEUVRING	165
9.1.7	INTERLOCKING OF TURNING GEAR	166
9.1.8	INSTRUMENTATION	166
9.1.9	IBRATION AND ALIGNMENT	166
9.1.10	BENCH LEST	166
9.2	**MATERIALS**	166
9.2.1	MATERIALS	166
9.2.2	MATERIAL TEST	167
9.2.3	NON-DESTRUCTIVE TESTS	167
9.3	**DESIGN AND CONSTRUCTION**	168
9.3.1	DESIGN	168
9.3.2	STRUCTURE	168
9.3.3	INDICATOR VALVES	169
9.3.4	CYLINDER SAFETY VALVE	169
9.3.5	CRANKCASES AND RELIEF VALVES	169
9.3.6	VENT PIPES	170
9.3.7	ALARMS	170
9.3.8	WARNING NOTICE	170
9.4	**PIPING SYSTEMS**	170

9.4.1 LUBRICATING OIL SYSTEMS 170

9.4.2 COOLING WATER SYSTEMS 171

9.4.3 OIL FUEL SYSTEMS 171

9.4.4 EXHAUST SYSTEMS 172

9.4.5 STARTING AIR PIPE SYSTEM 172

9.5 STARTING ARRANGEMENTS 173

9.5.1 INITIAL STARTING ARRANGEMENTS 173

9.5.2 AIR CHARGING EQUIPMENT 173

9.5.3 AIR RECEIVERS AND THEIR CAPACITY 173

9.5.4 ELECTRIC STARTING INSTALLATIONS 174

9.5.5 STARTING ARRANGEMENTS FOR EMERGENCY GENERATING SETS 174

9.6 SCAVENGING AND SUPERCHARGING ARRANGEMENTS 175

9.6.1 LUBRICATING OIL SYSTEMS 175

9.6.2 INSTRUMENTS AND ALARM DEVICES 175

9.6.3 AIR fiLTERS AND SILENCERS 175

9.6.4 ROTOR SHAFT LOCKING DEVICES 175

9.6.5 CRITICAL SPEEDS 175

9.6.6 ROTORS AND ROTOR SHAFTS 176

9.7 GOVERNORS AND OVERSPEED PROTECTIVE DEVICES 176

9.7.1 GOVERNORS 176

9.7.2 OVERSPEED PROTECTIVE DEVICES 177

9.7.3 GOVERNORS FOR GENERATING SETS 177

9.8 HYDRAULIC TESTS 178

9.8.1 TEST PRESSURE 178

CHAPTER 10: TRANSMISSION GEARING

10.1 GENERAL REQUIREMENTS 179

10.1.1 APPLICATION 179

10.1.2 STRENGTHENING FOR NAVIGATION ICE 180

10.1.3 VIBRATION AND ALIGNMENT A 180

10.1.4 PLANS AND DOCUMENTS 180

10.2 MATERIALS 180

10.2.1 MATERIAL PROPERTIES 180

10.2.2 NON-DESTRUCTIVE TESTS 181

10.3 DESIGN AND CONSTRUCTION 181

10.3.1 DESIGN 181

10.3.2 TOOTH FORM 181

10.3.3 TOOTH SURFACE 181

10.3.4 GEAR 182

10.3.5 GEAR STALLS 182

10.3.6 GEAR CASING 182

10.3.7 CONNECTIONS 183

10.3.8 GRADE OF MESHING 183

10.3.9 REVERSAL 183

10.3.10 LUBRICATING AND COOLING 183

10.3.11 ALARM 184

10.3.12 EMERGENCY DEVICES 184

10.3.13 MARKINGS 184

10.4 TEST 185

10.4.1 BALANCE TEST 185

10.4.2 TRIALS 185

CHAPTER 11: SHAFTING AND PROPELLERS

11.1 GENERAL REQUIREMENTS 185

11.1.1 APPLICATION 185

11.1.2 GENERAL REQUIREMENTS 185

11.1.3 VIBRATION AND ALIGNMENT OF SHAFTING 186

11.1.4 PLANS AND DOCUMENTS 186

11.2 SHAFTING 187

11.2.1 GENERAL REQUIREMENTS 187

11.2.2 DIAMETER OF SHAFTS 187

11.2.3 MODIFICATION OF SHAFT DIAMETER 188

11.2.4 SHAFT LINERS 189

11.2.5 STERN TUBES AND BEARING 189

11.3 SHAFT TRANSMISSION UNITS 190

11.3.1 APPLICATION 190

11.3.2 COUPLING 190

11.3.3 COUPLING BOLLS 193

11.3.4 CLUTCHES AND CONTROL DEVICES 194

11.3.5 HYDRAULIC TRANSMISSIONS 194

11.3.6 TRANSMISSION AND CONTROL DEVICES FOR CONTROLLABLE PITCH PROPELLER 195

11.4 PROPELLERS 196

11.4.1 GENERAL REQUIREMENTS 196

11.4.2 CLEARANCES BETWEEN PROPELLER AND HULL 196

11.4.3 THICKNESS OF PROPELLER BLADES 196

11.4.4 FITTING OF PROPELLERS TO SCREWSHAFTS 198

11.4.5 FITTING OF KEYLESS PROPELLER BY OIL SHRINK METHOD 199

11.4.6 PROTECTION OF CONTROLLABLE PITCH PROPELLERS 201

CHAPTER 12: SHAFT VIBRATION AND ALIGNMENT

12.1 GENERAL REQUIREMENTS 202

12.1.1 GENERAL REQUIREMENTS 202

12.1.2 RESTRICTED SPEED RANGES 202

12.1.3 MEASUREMENTS 203

12.1.4 MISCELLANEOUS 204

12.2 TORSIONAL VIBRATION 204

12.2.1 APPLICATION 204

12.2.2 TORSIONAL VIBRATION CALCULATIONS 205

12.2.3 ALLOWABLE STRESSES 205

12.2.4 ADDITIONAL REQUIREMENTS FOR GENERATORS 208

12.2.5 ALLOWABLE VIBRATORY TORQUES FOR GEARING AND fIEXIBLE COUPLING 208

12.2.6 MISCELLANEOUS 209

12.3 AXIAL VIBRATION 209

12.3.1 APPLICATION 209

12.3.2 AXIAL VIBRATION CALCULATIONS 209

12.3.3 ALLOWABLE AMPLITUDES 210

12.4 WHIRLING VIBRATION 210

12.4.1 APPLICATION 210

12.4.2 WHIRLING VIBRATION CALCULATIONS 211

12.4.3 SPEED RANGES TO HE AVOIDED 211

12.5 ALIGNMENT 211

12.5.1 APPLICATION 211

12.5.2 SHAFT ALIGNMENT CALCULATIONS 211

12.5.3 REQUIREMENTS FOR SHAFTING ALIGNMENT 212

12.5.4 MEASUREMENTS FOR SHAFTING ALIGNMENT 212

CHAPTER 13: STEERING GEAR AND WINDLASSES

13.1 STEERING GEAR 213

13.1.1 GENERAL REQUIREMENTS 213

13.1.2 PLANS AND DOCUMENTS 214

13.1.3 INSTALLATION AND ARRANGEMENT 214

13.1.4 BASIC PERFORMANCE 214

13.1.5 MATERIALS 216

13.1.6 CONSTRUCTION AND DESIGN 216

13.1.7 RELIEF VALVES 218

13.1.8 STEERING GEAR CONTROL SYSTEMS 219

13.1.9 EMERGENCY POWER 220

13.1.10 MONITORING AND ALARMS 220

13.1.11 ADDITIONAL REQUIREMENTS 221

13.1.12 NON-DESTRUCTIVE TESTING 222

13.1.13 TESTING 223

13.1.14 TRIALS 223

13.2 WINDLASSES 226

13.2.1 DEFINITIONS 226

13.2.2 PLANS AND DOCUMENTS 227

13.2.3 GENERAL REQUIREMENTS 227

13.2.4 PROTECTION AND BRAKING EQUIPMENT 227

CHAPTER 14: STRENGTHENING FOR NAVIGATION IN ICE

14.1 GENERAL REQUIREMENT 228

14.1.1 GENERAL REQUIREMENTS 228

14.1.2 MAIN ENGINE OUTPUT 228

14.1.3 ICE TORQUE 231

14.1.4 MATERIALS FOR DRAFTING 232

14.2 SHAFTING 232

14.2.1 INTERMEDIATE AND THRUST SHAFTS 232

14.2.2 SCREWSHAFTS 232

14.2.3 REDUCTION GEARING 233

14.3 PROPELLERS 234

14.3.1 MATERIALS FOR PROPELLERS 234

14.3.2 THICKNESS OF PROPELLER BLADES 234

14.3.3 MISCELLANEOUS 235

14.4 STARTING ARRANGEMENTS AND COOLING WATER SYSTEM 235

14.4.1 STARTING ARRANGEMENTS 235

14.4.2 COOLING WATER SYSTEM 236

CHAPTER 15: SPARE PARTS

15.1 GENERAL REQUIREMENTS 236

15.1.1 GENERAL REQUIREMENTS 236

15.2 NUMBER OF SPARE PARTS 237

15.2.1 TABLES OF SPARE PARTS 237

CHAPTER 16: ADDITIONAL REQUIREMENTS FOR MACHINERY INSTALLATIONS OF SMALL SHIPS AND SHIPS IN RESTRICTED SERVICE

16.1 GENERAL REQUIREMENTS 242

16.1.1 APPLICATION 242

16.2 ADDITIONAL REQUIREMENTS 243

16.2.1 DOORWAYS OFF ENGINE ROOMS OR BOILER ROOMS 243

16.2.2 BOILER ARRANGEMENT 243

16.2.3 BILGE SUCTION ARRANGEMENT IN MACHINERY SPACE 243

16.2.5 BILGE PUMPS AND BILGE PIPING 243

16.2.6 AIR, OVERFLOW AND SOUNDING PIPES 243

16.2.7 OIL BURNING UNITS OF BOILERS 244

16.2.8 OIL FUEL BOOSTER PUMPS 244

16.2.9 FEED WATER PUMPS FOR BOILERS 244

16.2.10 FEED WATER SYSTEMS FOR BOILERS 244

16.2.11 COOLING WATER PIMPS 244

16.2.12 LUBRICATING OIL PUMPS 245

16.2.13	BILGE LINES OF OIL TANKERS	245
16.2.14	GEARING	245
16.2.15	STEERING GEAR	245
16.2.16	SPARE PARTS	245

CHAPTER 1: GENERAL PROVISIONS

1.1 GENERAL REQUIREMENTS

1.1.1 Application

1.1.1.1 The design, construction, installation as well as testing and trial of main propulsion and auxiliary machinery installations together with their associated equipment, boilers, pressure vessels, pumping and piping systems, and gearing fitted in classed ships are to comply with the relevant requirements prescribed in this PART.

1.1.1.2 The requirements for machinery installations of small ships and ships in restricted service may be appropriately relaxed, reference is made to the provisions in Chapter 16 of this PART.

1.1.2 Plans and documents

1.1.2.1 Prior to the commencement of shipbuilding, plans and documents as detailed in the respective Chapters of this PART are to be submitted to the Society for approval, including arrangement of machinery and boiler spaces.

The Society may require the submission of such other plans and documents as it deems necessary for individual cases.

1.1.2.2 Any major alterations to basis design, materials or other aspects of the approved plans are to be re-submitted to the Society for approval.

1.1.2.3 For products approved by the Society, the submission of such plans and detailed information are not necessary.

1.1.3 Ambient conditions

1.1.3.1 The main and auxiliary engines, shafting and machinery equipment essential to safety are to be so designed, type—selected and arranged as to ensure normal operation under the inclination conditions as shown in Table 1.1.3.1. The Society may permit smaller angles of inclination, taking into consideration the type, size and service conditions of the ship.

Angle of inclination of ships

Table 1.1.3.1

Installations, Components	Angle of inclination① (°)			
	Athwartships		Fore-and-aft	
	static	dynamic	static	dynamic
Main and auxiliary machinery	15	22.5	5②	7.5
Safety equipment: e.g. emergency power installations, emergency fire pumps and their devices	22.5	22.5	10	10

Notes:
①Athwartships and fore-and-aft inclinations may occur simultaneously.
②Where the length of the ship exceeds 100 m, the fore-and-aft static angle of inclination may be taken as 500/L = length of the ship, in m."

1.1.3.2 For the purpose of determining the rating of main and auxiliary diesel engines, the following ambient reference conditions apply to ships for unrestricted service;
Total barometric pressure 0.1 MPa V
Air temperature + 45°C
Relative humidity 60%
Sea water temperature (charge air coolant—inlet) 32°C
The engine manufacturers are not expected to provide simulated ambient reference conditions at a test bed, but are required to submit the modified values of the rating of the diesel engines under the ambient reference conditions.

1.1.3.3 In the case of ships for restricted service, the rating is to be suitable for the temperature conditions associated with the geographical limits of the restricted service.

1.1.4 Vibration

1.1.4.1 The propulsion installations are to be so designed, constructed and installed that any mode of their vibrations is not to cause undue stresses in them in the normal operating ranges.

1.1.5 Strengthering for navigation in ice

1.1.5.1 For ships navigating in ice and granted relevant additional notations, their main propulsion machinery and auxiliary are to comply with the provisions of these regulations.

1.1.6 Astern power

1.1.6.1 In order to maintain sufficient manoeuvrability of a ship in all normal circumstances, the main propulsion machinery is to be capable of astern.

1.1.6.2 The main propulsion machinery is to be capable of maintaining in free route astern at least 70% of the ahead revolutions for a period of at least 30 min. '1`he output astern which may be developed in transient conditions is to be such as to enable the braking of the ship within reasonable time.

1.1.6. 3 For the main propulsion systems with reversing gears, controllable pitch propellers or electric propeller drive, running astern is not to lead to the overload of propulsion machinery.

1.1.7 Power conditions for generating sets

1.1.7.1 Auxiliary coupled to electrical generators are to be capable under service conditions of developing continuously the power to drive the generators at full rated output and, in the case of oil engines or gas turbines, of developing for a short period (15 min) an overload power of not less than 10%.

1.1.8 Availability of machinery

1.1.8.1 Ship's machinery is to be so arranged that it can be brought into operation from the dead ship condition using only the facilities available on board.
Dead ship condition is understood to mean that the entire machinery installation, including the power supply, is out of operation and that auxiliary services such as compressed air, starting current from batteries, etc. , for bringing the main propulsion into operation and for the restoration of the main power supply are not available.
In order to restore operation from the dead ship condition, an emergency generator may be used provided that it is ensured that the emergency power supply from it is available at all times. It is assumed that means are available to start the emergency generator at all times.

1.1.8.2 The requirements in 1.1.8.1 above are applicable to cargo ships of 500 gross tonnage and over engaged on international voyages and all passenger ships, and also applicable to cargo ships of 1000 gross tonnage and over engaged in greater coastal service or beyond on non—international voyages and all passenger ships.

1.1.9 Automation of machinery installations

1.1.9.1 Ships granted with automation notations for machinery installations are to comply with the relevant requirements of these Regulations.

1.1.10 Materials

1.1.10.1 The materials used in the construction of main components for main propulsion and auxiliary machinery installations and propulsion shafting systems, boilers and pressure vessels are to be in compliance with the relevant requirements of the Rules for Materials and Welding by the Society.

1.1.10.2 Materials not covered in the Rules for Materials and Welding by the Society may be accepted, provided that they have been inspected and tested as necessary and to the satisfaction of the Society.

1.1.11 Fuel

1.1.11.1 The flash point (closed cup test) of oil fuel for the main propulsion machinery and prime movers to drive generators or boilers are, in general, to be not less than 60"C For the prime movers of emergency generators, oil fuel having a flash point of not less than 43 °C is permissible.

1.1.11.2 In ships intended for restricted services, where additional precautions are taken so that the ambient temperature of the space in which oil fuel is stored or used will not be allowed to rise to within 10°C below the flashpoint of the oil fuel, the Society may permit the general use of oil fuel having a flashpoint of less than 60°C but not less 43°C.

1.1.11.3 ln cargo ships the use of fuel having a lower flashpoint than 43°C may be permitted provided that such fuel is not stored in any machinery space and the arrangements for the complete installation has been specially approved by the Society.

1.1.12 Construction survey of machinery

1.1.12.1 All important items of main propulsion and auxiliary machinery installations for classed ships are to be surveyed during construction in accordance with the relevant provisions of this PART, such as:

a. Main diesel engines and main steam or gas turbines;
b. Gearing, clutches, flexible coupling and superchargers;
c. Auxiliary engines which are the sources of power for services essential to safety or to the operation of the ship at sea;
d. Air compressors;
e. Boilers having a design working pressure exceeding 0.35 MPa or thermal oil heaters with a heating area exceeding 4.5m2;
f. Air receivers for starting the main engines and any other untired pressure vessels intended for a working pressure exceeding 0.68 MPa;
g. Valves and other fittings intended for installing in pressure piping systems having a working pressure exceeding 0.68 MPa;
h. All pumps necessary for the operation of main propulsion and essential machinery, e.g. boiler feed pump, cooling water circulating pump, condensate pump ,fuel oil pump, and lub oil pump;
i. All pumps essential to safety of the ship, e.g. fire, bilge and ballast pumps;

j. Steering gear, side thrusters and their control mechanisms;
k. Windlasses, cargo winches, lifeboat winches, mooring equipment;
l. Hydraulic drives;
m. Centrifugal separators for fuel and lubricating oil;
n. All heat exchangers necessary for the operation of main propulsion and essential machinery, e.g. fresh water and lubricating coolers, fuel oil and feed heaters, , condensers, evaporators, deaerators and distiller units.

1.1.13 Trials

1.1.13.1 The mooring and sea trials for machinery installations are to be carried out according to the relevant provisions of the Rules and according to the test programmes approved by the Society. On completion of the trials, corresponding technical documents and trial reports are to be furnished by the shipyard.

1.2 ARRANGEMENT OF MACHINERY SPACES

1.2.1 Doorways and escapes

1.2.1.1 Each engine room or boiler room is to have at least two doorways leading to the freeboard deck or bulkhead deck. These doorways are to be located as far apart from each other as possible and are to be easily accessible. In the case of small ships one ladder way may be accepted.
Metal ladders with handrails are to be fitted to each of the doorways mentioned above to the machinery space floor plating.
The inclination of the ladders to the floor plating is not to be more than 60°C.

1.2.1.2 Where a doorway is provided in the watertight bulkhead between engine room and shaft tunnel, a watertight door is to be fitted. The arrangement of the watertight door is to comply with the requirements specified in 2.12.9.3.

1.2.2 Boiler- arrangement

1.2.2.1 Where boilers are located in machinery spaces on tween—decks and the boiler rooms are not separated from the machinery spaces by watertight bulkheads, the tween—decks are to be provided with at least 200 mm in height. This area may be drained to the bilges. The drain tank is not to form part of an overflow system.

1.2.2.2 The clearance between boilers and fuel oil tank boundaries is not to be less than the values specified in Table 1.2.2.2.

Table 1.2.2.2

The clearance between boilers and fuel oil tank boundaries (mm)

		Top plating of double bottom oil fuel tanks	Oil fuel tank wall
Water-tube boiler	Outer casing	-	450
	Bottom	600	-
Smoke-tube boiler	Back end plate	-	600
	Bottom	450	-

1.2.3 Skylights of machinery casings

1.2.3.1 Skylights located in machinery spaces of category A are to be of steel and are not to contain glass panels. Suitable arrangements are to be made to permit the release of smoke in the event of tire, from the space to be protected.

1.2.4 Ventilation

1.2.4.1 Machinery spaces are to be adequately ventilated so as to ensure that when machinery or boilers therein are operating at full power in all weather conditions including heavy weather, an adequate supply of air is maintained to the spaces for the safety and comfort of personnel and the operation of the machinery.

1.2.4.2 All spaces, where flammable or toxic gram or vapours may accumulate, are to be provided with adequate ventilation.

1.2.5 Corrosion protection

1.2.5.1 Parts which are exposed to corrosion are to be safeguarded by being manufactured of corrosion-resistant materials or provided with effective corrosion protection.

1.2.6 Protection

1.2.6.1 In places where the working of machinery and equipment may cause injuries to the operating personnel, handrails, protecting casings or screens are to be provided.

1.2.6.2 Placards or labels are to be provided for illustrating the correct procedures of operation, so as to avoid any mistakes in the operation or change-over of the machinery or systems.

1.2.6.3 All surfaces of machinery and pipes where the hot surfaces may injure personnel are to be protected by handrails or shields. Where the surface temperature may exceed 220°C, they are to be

effectively shielded to prevent ignition caused by inflammable liquids. Where the insulation covering these surfaces is oil-absorbing or previous to oil, such insulation is to be encased in steel or equivalent.

1.2.6.4 Noise levels in machinery spaces are to comply with the provisions of the approved standard. If this noise, cannot be sufficiently reduced the source of excessive noise is to be suitably insulated or isolated or a refuge from noise is to be provided if the space is required to be manned. Ear protectors are to be provided for personnel required to enter such spaces, if necessary.

1.2.7 Communication

1.2.7.1 At least two independent means are to be provided for communicating orders from the navigating bridge to the position in the machinery space or in the control room from which the engines are normally controlled: one of these is to be an engine—room telegraph which provides visual indication of the orders and responses both in the machinery space and on the navigating bridge. Appropriate means of communication is to be provided to any other positions from which the engines may be controlled.

1.2.8 Accessibility

1.2.8.1 Accessibility, for the purposes of control, maintenance, inspection and repair of various machinery and equipment, is to be provided in machinery and boiler spaces.

1.2.9 Stuffing boxes for shaftings

1.2.9.1 Stuffing boxes are to be fitted on the watertight bulkhead of the engine room where the shafts pass through. They are to be so arranged as to be convenient for tightening and renewing the packings from the engine room side. The fore sealing ends of the stem tubes as well as the plummer blocks are to be easily accessible for maintenance.

1.2.10 Hoisting appliances

1.2.10.1 In machinery spaces there are to be provided with appropriate hoisting appliances to facilitate the removing and replacing of the components of main and auxiliary machinery. These hoisting appliances are to be capable of being operated properly under sailing conditions.

1.2.11 Securing of spare parts

1.2.11.1 All spare parts for main and auxiliary machinery and other arrangements are to be efficiently secured in suitable places.

1.2.12 Location of emergency installations in passenger ships

1.2.12.1 Emergency sources of electrical power, fire pumps, bilge pumps except those specifically serving the spaces forward of the collision bulkhead, any fixed fire-extinguishing system required in these rules

and other emergency installations which are essential for the safety of the ship, except anchor windlasses, are not to be installed forward of the collision bulkhead.

CHAPTER 2: PUMPING AND PIPING SYSTEMS

2.1 GENERAL REQUIREMENTS

2.1.1 Application

2.1.1.1 Unless otherwise stated, this Chapter is applicable to piping systems of all kinds of ships, but chemical cargo, liquefied gases and process piping are excluded from the application of this Chapter.

2.1.2 Plans and documents

2.1.2.1 For all ships, the following plans are to be submitted for approval:

a. Arrangement of machinery and boiler spaces;
b. Bilge piping and ballast piping;
c. Air pipes, sounding pipes and overflow pipes;
d. Fuel oil feeding system for main and auxiliary engines and boilers;
e. Fuel oil transfer system;
f. Lubricating oil piping for main and auxiliary engines;
g. Cooling water piping system for main and auxiliary engines;
h. Compressed air piping system;
i. Steam piping;
j. Condensate and exhaust steam piping;
k. Boiler feed and blow—off pipes;
l. Oil fuel heating pipes;
m. Purgative system for fuel oil and lubricating oil;
n. Exhaust gas piping for main and auxiliary engines;
o. Ventilation system for engine room;
p. Hydraulic systems;
q. Additional plans and documents as may be deemed necessary by the Society.

2.1.2.2 For oil tankers, the following plans are to be submitted in addition:

a. Cargo oil piping system;
b. Bilge piping system of cargo pump rooms and cofferdams;
c. Cargo oil heating pipe;
d. Arrangement of venting systems (including purge, gas-free systems);
e. Closed ullage system (where a fixed inert gas system is employed).

2.1.2.3 For all ships, the following plans and documents are to be submitted for information;

a. Specifications of machinery installations;
b. Particulars of machinery equipment.

2.1.2.4 The materials, sizes, types, design pressures, design temperatures, etc. of pipes, valves, fittings, etc. are to be clearly marked on plans. where separate calculations are not submitted necessary rule calculations are to be affixed to the plans.

2.1.3 Design pressure

2.1.3.1 The design pressure for piping is the maximum permissible working pressure and it is not to be less than the highest set pressure of any safety valve or relief valve.

2.1.3.2 For pipes containing fuel oil, the design pressure may be taken as given in Table 2.1.3.2.

Table 2.1.3.2
Design pressure for pipes containing fuel oil

Working Temperature / Working pressure	T ≤ 60 °C	T > 60 °C
P ≤ 0.7 Mpa	0.3 Mpa or highest working pressure, whichever is greater	0.3 Mpa or highest working pressure, whichever is greater
p > 0.7 Mpa	Highest working pressure	1.4 Mpa or highest working pressure, whichever is greater

2.1.3.3 For special cases, the design pressure will be specially considered.

2.1.4 Design temperature

2.1.4.1 The design temperature is to be taken as the maximum temperature of the internal fluid, but in no case is it to be less than 50°C.

In the case of pipes for superheated steam, the temperature is to be taken as the designed operating steam temperature for the pipeline, provided that the temperature at the super heater outlet is closely controlled. Where temperature fluctuations exceeding 15 °C above the designed temperature are expected in normal service, the steam temperature to be used for determining the allowable stress is to be increased by the amount of this excess. For special cases, the design temperature is to be specially considered.

2.1.5 Classes of pipes

2.1.5.1 For the purpose of assigning appropriate testing requirements, types of joints to be adopted, heat treatment and weld procedure, pressure piping systems are divided into three classes in accordance with their design pressure and design temperature, as indicated in Table 2.1.5.1.

Table 2.1.5.1
Piping system class

Piping system	Class I		Class II		Class III	
	Design pressure (Mpa)	Design Temp. (°C)	Design pressure (Mpa)	Design temp. (°C)	Design Pressure (Mpa)	Design Temp. (°C)
Steam	> 1.6	or > 300	≤ 1.6	and ≤ 300	≤ 0.7	and ≤ 170
Thermal oil	> 1.6	or > 300	≤ 1.6	and ≤ 300	≤ 0.7	and ≤ 150
Fuel oil, luboil, hydraulic oil	> 1.6	or > 150	≤ 1.6	and ≤ 150	≤ 0.7	and ≤ 60
Other media	> 4.0	or > 300	≤ 4.0	and ≤ 300	≤ 1.6	and ≤ 200

Notes:

1. For Classes II and III pipes, both parameters for design pressure and design temperature are to be met, for Class I pipes, only one of the parameters is sufficient.
2. Toxic or corrosive media, flammable media heated above flash point or with flash point below 60°C media and liquefiedgas belong to class I. If means of special safeguards for preventing leakage and its consequences are provided, they may also belong to class II, but except toxic media.
3. Cargo pipes belong to class III.
4. Class III pipes may be used for open ended piping, e.g. drains, overflows, vents boiler waste steam pipes, etc.
5. Other media mean air, water, and non-flammable hydraulic oil.
6. Thermal oil means the circulating oil used in the thermal oil system as specified in 4.8.

2.1.6 Piping arrangements and separation of tanks

2.1.6.1 All pipes are to be properly secured, and provision is to be made to avoid excessive stresses caused by thermal expansion in pipes or due to deflection of ship structure.

2.1.6.2 Penetration pieces or steel pads are to be provided for pipes through watertight or gastight structures.

2.1.6.3 Where the following tanks are adjacent to each other, they are to be separated by cofferdams:

a. Lubricating oil tanks and fuel oil tanks;
b. Lubricating oil tanks and fresh water tanks;
c. Boiler feed water tanks and fuel oil tanks;
d. Fresh water tanks and fuel oil tanks;
e. Boiler feed water tanks and lubricating oil tanks.

Fresh water pipes are not to be led through oil tanks, nor oil pipes through fresh water tanks. Where it is impracticable to do so, the pipes are to be led inside an oil—tight pipe tunnel. For other pipes passing

throng: fuel oil tanks, their thickness is to be increased, and no detachable pipe joint is permissible inside these tanks.

2.1.7 Corrosion protection

2.1.7.1 Steel pipes are to be protected against corrosion, and protective coatings are to be applied on completion of all fabrication. i.e. bending, forming and welding of the steel pipes.

2.1.8 Fire protection

2.1.8.1 Air, overflow and sounding pipes for fuel oil tanks are not to be led through living quarters. Where this is not practicable, no detachable pipe joint is permissible in these spaces.

2.1.8.2 All steam, oil and water pipes as well as oil and other liquid tanks are not to be placed above or behind the switchboard. If this is not practicable, suitable protective means are to be provided.
In addition, oil pipes and oil tanks are not to be directly placed above the boilers, uptakes, steam pipes, exhaust gas pipes and silencers. If this is impracticable, effective means are to be made to prevent oil dropping onto the hot surfaces of the above-mentioned pipes or equipment.

2.1.9 Protection

2.1.9.1 Pipes in cargo spaces, coal bunkers, chain lockers and other positions where they are liable to mechanical damage are to be efficiently protected by removable casings.

2.1.9.2 All pipes, fittings, pumps, filters and other equipment of piping systems are to be provided with drain valves or cocks where necessary.

2.1.9.3 The pipes which may be subject to a pressure greater than the design value are to be fitted with relief valves at the delivery side of pumps. The discharge from relief valves fitted in oil pipelines is to be led to the suction side of pumps or tanks. Heaters and air compressor coolers are also to be fitted with relief valves. The releasing pressure of relief valves is, in general, not to be greater than the design pressure of pipelines.

2.1.9.4 Where pressure—reducing valves are fitted in the pressure piping, a relief valve and a pressure gauge are to be fitted behind the pressure-reducing valve and a by—pass pipe is to be provided. Or, an additional spare pressure reducing valve in parallel is to be provided.

2.1.10 Insulation

2.1.10.1 The insulation lagged on the machinery surfaces with a temperature over 220°C is to comply with the provisions in 1.2.6.3. The insulation in way of dismountable joints and valves is to be easily renewed.

2.1.10.2 Pipes passing through refrigerated spaces (including fish rooms), excluding those intended to serve such spaces, are to be well insulated to prevent and from the steel structure.

2.1.10.3 Where the pipes pass through chambers intended for temperatures 0°C or below, they are in general to be insulated from the steel structure of these chambers.

2.1.11 Compensation for expansion and heat treatment

2.1.11.1 Suitable provision for compensation is to be made for all pipes subject to expansion, contraction or other strain, such as bends, loops, or expansion joints as required. Slip joints are not to be used in pipe lines within dry cargo holds, deep tanks, or other spaces where they are not readily accessible for inspection.

2.1.11.2 Where expansion pieces are fitted in piping, they are to be of an approved type. The adjoining pipes are to be suitably aligned and anchored. Where necessary, expansion pieces of bellows type are to be protected against.

2.1.11.3 Carbon and carbon-manganese steel pipes intended for Class 1 piping systems are to be heat treated after cold bending when the mean bending radius is less than three times the external diameter of the pipes. All alloy steel pipes are to be heat treated after bending.

2.1.11.4 Copper and copper alloy pipes which have been hardened by cold bending are to be suitably heat treated on completion of fabrication and prior to being tested by hydraulic pressure. Copper pipes are to be annealed and copper alloy pipes are to be either annealed or stress relief heat treated.

2.1.11.5 The heat treatment of carbon and carbon-manganese steel pipes after is to be as follows: the pipe is heated gradually and uniformly up to 580 to 620°C and the holding time at this temperature is to be at least one hour per 25 mm of the wall thickness of the pipe or fraction thereof the pipe, is to be cooled gradually to 400°C in the furnace, and then to be cooled in still air gently.
The heat treatment of alloy steel pipes is to be determined in accordance with their compositions.

2.1.11.6 The heat treatment of pressure pipes after welding is also to meet the relevant requirements set forth in the Rules for Materials and Welding by the Society.

2.1.12 Materials and non-destructive testing

2.1.12.1 The materials to be used for various pipes, valves and fittings are to be suitable for the medium and service for which the piping is intended. In the case of especially corrosive media, the materials for the piping system are to be considered by the Society in each particular case.

2.1.12.2 All butt—joints of Class I pipes having an external diameter greater than 76 mm are to be examined by means of radiographic or gammagraphic method.

2.1.12.3 Butt—joints of Class II pipes having an external diameter greater than 100 mm and butt-joints of Class 1 pipes having an external diameter equal to or less than 76 mm are to be examined at the rate of 10% of such butt—joints by means of radiographic or gammagraphic method.

2.1.12.4 Where, for Classes I and II pipes, radiographic or gammagraphic testing and measuring is impossible for technical reasons, other equivalent methods of testing may be permitted, subject to the agreement of the Society.

2.1.12.5 In particular cases, ultrasonic examination may be accepted in lieu of radiographic examination subject to agreement of the Society.

2.1.12.6 Fillet welds of flange pipe connections are to be examined by the magnetic particle method or by other appropriate non-destructive methods, in case of Class 1 pipes. Magnetic particle or equivalent tests may be required by the Society for fillet welds of other class pipes depending upon type of materials, wall thickness, outside diameter of pipes and nature of medium.

2.1.12.7 Ultrasonic examination in addition to the above non-destructive testing may be required in special cases at the Society‘s discretion.

2.1.12.8 Radiographic, gamma—ray and ultrasonic examinations are to be performed with an appropriate technique by trained operators. At the request of the Society, complete details of the radiographic, gamma—ray or ultrasonic technique are to be submitted for approval.

2.1.12.9 Magnetic particle examination is to be performed with suitable equipment and procedures, and with a magnetic flux output sufficient for defect detection. The equipment may be required to be checked against standard samples.

2.1.12.10 the welds are to meet the acceptable standard level as required by the Society. Unacceptable defects are to be removed and repaired to the satisfaction of the Society.

2.1.13 Spare parts

2.1.13.1 The spare parts for pumps a.re to comply with the relevant requirements of Chapter 15.

2.1.14 Miscellaneous

2.1.14.1 The valves and fittings fitted in engine rooms, boiler rooms, pump rooms and shaft tunnels are to be easily accessible for operation. Where the valves and fittings are situated under the floor plate not easily accessible for operation, they are to be provided with extended operating rods or tools for operation. Furthermore, holes are to be cut in the floor plate under which the valves or fittings are located and to be provided with covers.

2.1.15 Valves and fittings in piping systems

2.1.15.1. Valves and fittings in piping systems are to be compatible with the pipes to which they are attached in respect of their strength and are to be suitable for effective operation at the maximum working pressure they will experience in service.

2.2 CARBON AND LOW ALLOY STEELS

2.2.1 Carbon and low alloy steel pipes, valves and fittings

2.2.1.1 Classes I and H pipes are to be seamless steel pipes or welded pipes fabricated with a welding procedure approved by the Society.

2.2.1.2 In general, carbon and carbon-manganese steel pipes, valves and fittings are not to be used for medium temperatures above 400°C. Nevertheless, they may be used for higher temperatures if their metallurgical behavior and time dependent strength (UTS after 100,000 ‘h) are in compliance with national or international codes or standards and if such values are guaranteed by the steel manufacturer.

2.2.2 Calculation of wall thickness

2.2.2.1 The minimum wall thickness 8 of steel pipes subject to internal pressure is not to be less than that determined by the following formula:

$$\delta = \delta_o + b + c \qquad \text{mm}$$

Where:
δ_0 -The basic wall thickness, in mm, see 2.2.2.2;
b - Bending allowance, in mm, see 2.2.2.3;

c- Corrosion allowance, to be obtained from Table 2.2.2.1, in mm. For pipes passing through tanks, an additional corrosion allowance is to be taken, depending on the external medium, in order to account for the external corrosion. Where pipes and any integral pipe joints are efficiently protected against corrosion by means of coating, lining, etc. the corrosion allowance may be reduced by not more than 50%. In the case of use of special alloy steel with sufficient corrosion resistance, the corrosion allowance may be reduced, even to zero.

Table 2.2.2.1
Corrosion allowance *C* for steel pipes

Piping service	***C*** (mm)	Piping service	***C*** (mm)
Superheated steam systems	0.3	Lubricating oil systems	0.3
Saturated steam system	0.8	Fuel oil systems	1.0
Steam oil systems in cargo tanks	2.0	Cargo oil systems	2.0
Feed water for boilers in open circuit systems	1.5	Refrigerating plants	0.3
Feed water for boilers in closed circuit systems	0.5	Fresh water systems	0.8
Blow-off (for boilers) systems	1.5	Sea water systems	3.0
Compressed air systems	1.0	Brine systems for refrigerated cargo	2.0
Hydraulic oil systems	0.3		

2.2.2.2 The basic wall thickness δ_0 for steel pipes is to be determined by the following formula:

$$\delta_o = \frac{pD}{2[\sigma]e + p} \quad \text{mm}$$

Where:
p- desing pressure, in MPa, see 2.1.3.1 of this Chapter;
D- Outside diameter of steel pipes, in mm;
[σ] – permissible stress of steel pipes, in N/mm^2, see 2.2.2.4;
e- welding efficiency factor. For seamless steel pipes and electric resistance or induction welded steel pipes, e is to be taken as 1; for pipes made by other methods, e will be specially considered.

2.2.2.3 Bending allowance b is not to be less than that determined by the following formula:

$$b = 0.4\frac{D}{R}\delta_o \quad \text{mm}$$

Where:
R- Radius of curvature of a pipe bend at the centre line of the pipe, in mm, in general, R is not to be less than 3D;
D- outside diameter of steel pipes, in mm,
δ_0 basic wall thickness, in mm, see 2.2.2.2.

2.2.2.4 Permissible stress [σ] of steel pipes is to be taken as the lowest of the following values:

$$[\sigma] = \frac{\sigma_b}{2.7} \qquad N/mm^2$$

$$[\sigma] = \frac{\sigma_s^T}{1.6} \qquad N/mm^2$$

$$[\sigma] = \frac{\sigma_D^T}{1.6} \qquad N/mm^2$$

$$[\sigma] = \sigma_c^T \qquad N/mm^2$$

Where:
σ_b – specified minimum tensile strength of material at ambient temperature, in N/ mm^2;
σ^T_S- specified minimum yield stress or 0.2% proof stress ($\sigma_p 0.2$) of material at design temperature, in N/mm^2;
σ^T_D – average stress of material to produce rupture in 100,000 h at design temperature, in N/mm^2;
σ^T_e- average stress to produce 1% creep in 100,000 h at the design temperature, in N/ mm^2;
σ_b, σ^T_S, σ^T_D- are to comply with the relevant requirements od to rules for Materials and Welding by the Society.

2.2.2.5 The minimum wall thickness δ_m mentioned in 2.2.2.1 above has not taken into account the negative manufacturing tolerance, where there is any negative tolerance allowable in manufacture; the nominal thickness of pipes is not to be less than that determined by the following formula:

$$\delta_m = \frac{\delta}{1 - \frac{a}{100}} \quad \text{mm}$$

Where:

a- Percentage of negative manufacturing tolerance on thickness.

2.2.2.6 Where the minimum thickness calculated by the formula specified in 2.2.2.5 is less than that shown in Table 2.2.2.6(1) or Table 2.2.2.6(2), the minimum nominal thickness for the appropriate standard pipe size shown in the Tables is to be used.
For threaded pipes, the thickness is to be measured at the bottom of the thread.

Table 2.2.2.6 (1)
External diameter and minimum nominal thickness for steel pipes

External diameter D	Minimun nominal thickness for steel pipes 0 (mm)			
	Pipes in general	Venting overflow and sounding, pipes for structural tanks	Bilge, ballast and general sea water pipes	Bilge, air, overflow and soundng pipes through ballast and fuel tanks, ballast lines through fuel tanks and fuel lines through ballast tanks
10.2 ~ 12 13.5 ~ 17.2 20	1.6 1.8 2.0			
21.3 ~ 25 26.9 ~ 33.7 38 ~ 44.5	2.0 2.0 2.0	4.5	3.2 3.2 3.6	6.3
48.3 51 ~ 63.5 70	2.3 2.3 2.6	4.5 4.5 4.5	3.6 4.0 4.0	6.3 6.3 6.3
76.1 ~ 82.5 88.9 ~ 108 114.3 ~ 127	2.6 2.9 3.2	4.5 4.5 4.5	4.5 4.5 4.5	6.3 7.1 8.0
133 ~ 139.7 152.4 ~ 168.3 177.8	3.6 4.0 4.5	4.5 4.5 5.0	4.5 4.5 5.0	8.0 8.8 8.8
193.7 219.1 244.5 ~ 273	4.5 4.5 50	5.4 5.9 6.3	5.4 5.9 6.3	8.8 8.8 8.8
298.5 ~ 368 406.4 ~ 457	5.6 6.3	6.3 6.3	6.3 6.3	8.8 8.8

Notes:

1. Where pipes and any integral pipe joints are efficiently protected against corrosion by means of coating, lining, etc., the minimum wall thickness may be reduced by an amount up to not more than 1 mm.
2. For sounding pipes, except those for cargo tanks with cargo having a flash point less than 60°C, the minimum wall thickness is intended to apply to the part outside the tank.
3. For threaded pipes, where allowed, the minimum wall thickness is to be measured at the bottom of the thread.
4. The external diameters and thicknesses have been selected from ISO Recommendations R 336 for welded and seamless steel pipes. For pipes covered by other Standards slightly less thicknesses may be accepted.
5. The minimum wall thickness for bilge lines and ballast lines through deep tanks will be subject to special consideration by the Society. The minimum wall thickness for ballast lines through cargo oil tanks is not to be less than that specified in Table 5.3.4.2 of Chapter 5.
6. The minimum wall thickness for pipes larger than 457 mm nominal size is to be in accordance with a national or international standard and in any case not less than the minimum wall thickness of the appropriate column indicated for 406.4~457 mm pipe size in table 2.2.2.6 (1).
7. The minimum internal diameters of bilge, sounding, air and overflow pipes are to be:
   Bilge 50 mm
   Sounding 32 mm
   Air and overflow 50 mm
8. In general the minimum thickness listed in this Table is the nominal wall thickness and no allowance need be made for negative tolerance and reduction in thickness due to bending.
9. The minimum wall thickness of exhaust gas pipe will be subject to special consideration by the Society.
10. The minimum wall Thickness for cargo oil lines will be subject to special consideration by the Society.

Table 2.2.2.6 (2)
External diameter and minimum nominal thickness for stainless steel pipes

External diameter of pipes (D) (mm)	steel pipes (δ) (mm)
≤ 10	1.0
11~18	1.5
19~83	2.0
84~169	2.5
170~246	3.0
247~340	3.5
341~426	4.0
427~511	4.5
512~597	5.0

2.2.2.7 The minimum wall thickness of the scuppers and discharge pipes is to comply with the relevant requirements of Section 7 of this volume.

2.2.2.8 The minimum wall thickness of air pipes above the weather deck is to comply with the relevant requirements of Section 7 of this volume.

2.2.3 Connection of pipe lengths

2.2.3.1 Direct connection of pipe lengths may be obtained by:

a. Welded butt-joints between pipes or between pipes and valve chests or other fittings, the welded butt—joints are to be of full penetration type with or without special provisions for the quality of root side;
b. Slip—on sleeve welded joints, the slip—on sleeve welded joints are to have sleeves and relative welding of adequate dimensions conforming to the Society' s rules or a recognized standard;
c. Threaded sleeve joints of approved type.

2.2.3.2 The application of the aforesaid types of connection is as follows:

a. Butt welded joints and slip-on sleeve and socket welded joints are to comply with Table 2.2.3.2(1).

Connection of pipe lengths

Table 2.2.3.2 (1)

Type of connection	Allowed for classes	Allowed for outside diameter
Butt welded joints with special provision for a high quality of root side	I, II, III	No restriction
Butt welded joints without special provision for a high quality of root side	II, III	
Slip-on sleeve and socket welded joints	III	
	I, II, except for piping systems conveying toxic media where fatigue, severe erosion is expected to occur	D 88.9 mm

b. Slip-on threaded joints are to comply with requirements of a recognized standard. Slip-on threaded joints may be used for outside diameters as stated below except for piping systems conveying toxic or flammable media or services where fatigue, severe erosion or crevice is expected to occur. Threaded joints in CO_2 systems are to be allowed only inside protected spaces and in CO_2 cylinder rooms.
   - Threaded joints for direct connectors of pipe lengths with tapered thread are to be allowed for Class I, outside diameter not more than 33.7 mm as well as Class II, outside diameter not more than 60.3 mm;
   - Threaded joints for parallel thread are to be allowed for Class III, outside diameter not more than 60.3 mm;
   - In particular cases, sizes in excess of those mentioned above may be accepted by the Society.

2.2.4 Flange connections

2.2.4.1 Acceptable flange—pipe connections are indicated in Fig. 2.2.4.1.

Slip—on joints, sleeve threaded joints and other types of direct connection of pipe lengths (e.g. bell and spigot joints) may be allowed by the Society in each particular case for small diameter and depending upon the service conditions.

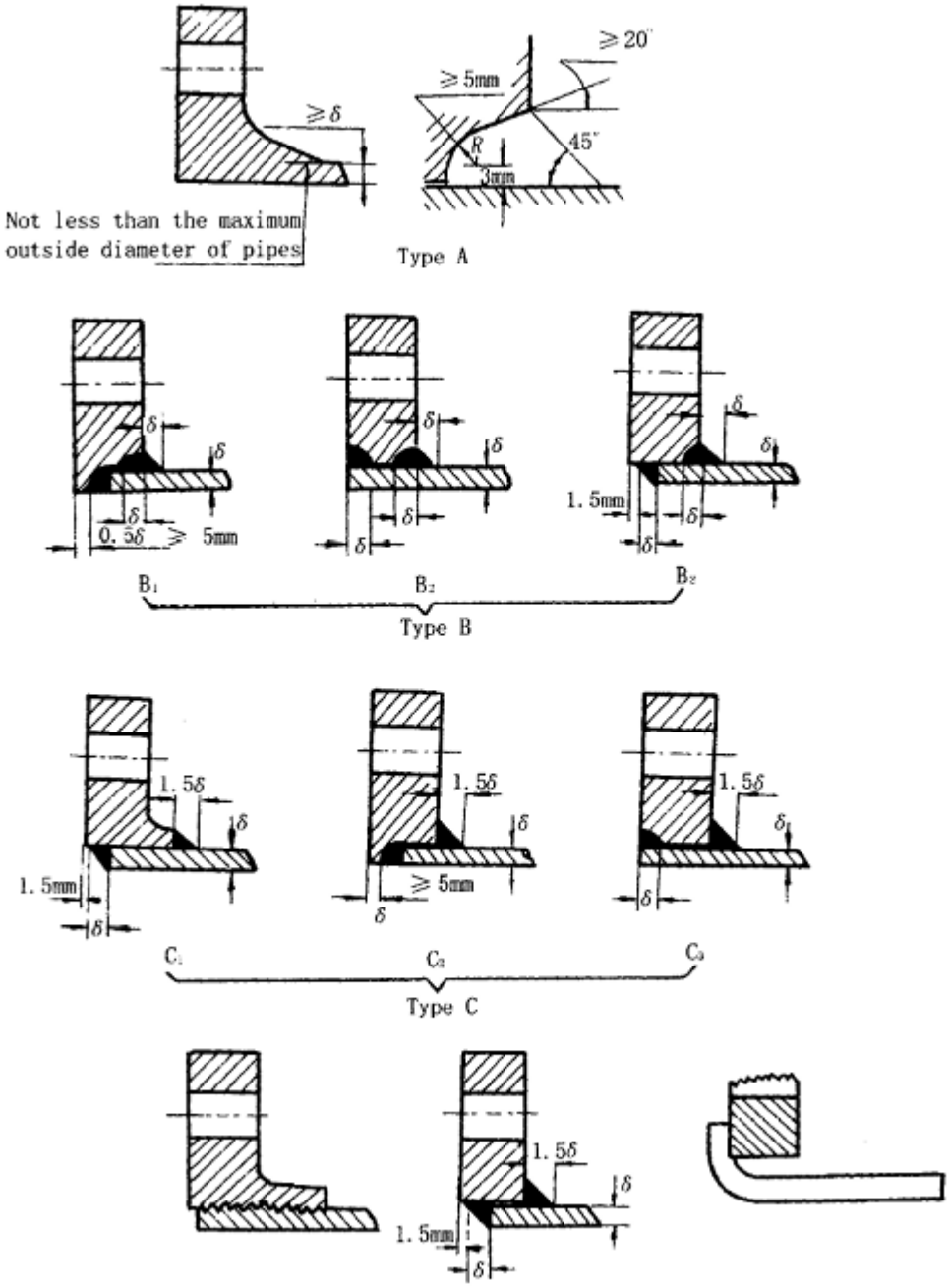

Fig 2.2.4.1 Typical flange connections (Unit: mm)

2.2.4.2 The above-mentioned types of flange connections are to be selected in accordance with the requirements specified in Table 2.2.4.2.

Table 2.2.4.2

Aplication of typical flange connections

Class of piping	Toxic or corosive①, flammable media①, LG	Lubricating oil, fuel oil	Steam③ and thermal oil	Other media①②③
I	A, B⑥	A, B	A, B⑥	A, B
II	A, B, C	A, B, C, E⑦	A, B, C, D⑤, E⑥	
III		A, B, C, E	A, B, C, D, E	A, B, C, D, E, F②

Notes:
①Including water, air, other gases, hydraulic oil;
②Type F for water pipes and open ended lines only;
③Only type A when design temperature exceeds 400 °C;
④Only type A when design pressure exceeds 1 MPa;
⑤Types D and E are not be used when design temperature exceeds 250 °C;
⑥Type B for outside diameter < 150 mm only;
⑦Type E for oil piping when design temperature < 150 °C and design pressure < 1.6 MPa only.

2.2.4.3 The dimensions of flanges and relative bolts are to be chosen in accordance with the national standards. For special application, the dimensions of flanges and relative bolts are to be subject to special consideration.

2.3 COPPER AND COPPER ALLOYS

2.3.1 Copper and copper alloy pipes, valves and fittings

2.3.1.1 Copper and copper alloy pipes used in Classes I and H piping systems are to be seamless.

2.3.1.2 Materials for Class Ill piping systems are to be manufactured and tested in accordance with the technical standards approved by the Society.

2.3.1.3 In general, copper and copper alloy pipes, valves and fittings are not be used for media having a temperature above the following limits:
Copper and aluminium brass: 200°C
Copper nickel: 300°C
Special bronze suitable for high temperature services: 260‘C

2.3.2 Calculation of wall thickness

2.3.2.1 The minimum wall thickness of copper and copper alloy pipes subject to internal pressure is not to be less than that determined by the following formula:

$$\delta = \delta_o + b + c \qquad \text{mm}$$

Where:

δ_0- the basic wall thickness, in mm, see 2.3.2.2;
b- Bending allowance, in mm, see 2.3.2.3;
c- Corrosion allowance; for copper, aluminium brass and copper-nickel alloys where the nickel content is less than 10%, c = 0.8 mm; copper-nickel alloys where the nickel content is 10% or greater, c =0.
5 mm; where the media are non-corrosive relative to the pipe material, c =0.

2.3.2.2 The basic wall thickness of copper and copper alloy pipes is to be determined by the following formula:

$$\delta_o = \frac{pD}{2[\sigma] + p} \qquad \text{mm}$$

Where:

p- Design pressure, in MPa see 2.1.3.1 of this Chapter;
D- outside diameter of pipes, in mm;
[σ]- Permissible stress, in N/mm^2 obtained from table 2.3.2.2. Intermediate values of stresses may be obtained by linear interpolation.

Table 2.3.2.2
Permissible stress of copper and copper alloy pipes

Pipe, material	Condition of supply	Specified minimum tensile strength (N/mm)	Permissible stress (N/mm) Design Temperature (°C)										
			50	75	100	125	150	175	200	225	250	275	300
Copper	Annealed	215	41	41	40	40	34	27.5	18.5	_	_	_	_
Aluminium brass	Annealed	325	78	78	78	78	78	51	24.5	_	_	_	_
Copper nickel CuNi5Fe1 Mn CuNi10Fe1 Mn	Annealed	275	68	68	67	65.5	64	62	59	56	52	48	44
Copper nickel CuNi30	Annealed	365	81	79	77	75	73	71	69	67	65.5	64	62

Notes:
1. If the metal temperature is between the values listed in the table, permissible stress may be determined by linear interpolation.
2. The permissible stresses of other materials than covered by the table are subject to approval of the Society.

2.3.2.3 Allowance b is not to be less than that determined by the following formula:

$$b = 0.4\frac{D}{R}\delta_o \qquad \text{mm}$$

Where:

R-radius of curvature of a pipe bend at the centre line of the pipe, in mm. In general, R is to be not less than 3 D;

D- outside diameter of pipe, in mm;

δ_0- The basic wall thickness, in mm, see 2.3.2.2.

2.2.2.4 The minimum wall thickness mentioned in 2.3.2.1 above has not taken into account the negative manufacturing tolerance, where there is any negative tolerance allowable in manufacture, the nominal thickness of pipes is not to be less than that determined by the following formula:

$$\delta_m = \frac{\delta}{1 - \frac{a}{100}} \qquad \text{mm}$$

Where: a- percentage of negative manufacturing tolerance on thickness.

2.2.2.5 Where the minimum wall thickness calculated by the formula specified in2.3.2.4 is less than that shown in Table 2.3.2.5, the minimum nominal thickness for the appropriate standard pipe size shown in the Table is to be used. For threaded pipes, the thickness is to be measured at the bottom of the thread.

Table 2.3.2.5

External diameter and minimum nominal thickness δ_m for copper and copper alloy pipes

Outside diameter of pipes, D (mm)	Minimum nominal thickness, m	
	Copper	Copper alloy
8 ~ 10	1.0	0.8
12 ~ 20	1.2	1.0
25 ~ 44.5	1.5	1.2
50 ~ 76.1	2.0	1.5
88.9 ~ 108	2.5	2.0
133 ~ 159	3.0	2.5
193.7 ~ 267	3.5	3.0
273 ~ 470	4.0	3.5
508	4.5	4.0

Notes:

1. The outside diameters and the thickness have been selected from ISO Standards.
2. For pipes covered by other Standards slightly less thickness may be accepted.

2.4 OTHER MATERIALS

2.4.1 Grey cast iron pipes, valves and fittings

2.4.1.1 Grey cast iron pipes, valves and fittings are not to be used in Class I and Class ll piping systems. Grey cast iron valves and fittings may be used in Class ll steam piping but the design pressure or temperature does not exceed 1.3 MPa or 220°C respectively.

2.4.1.2 Grey cast iron pipes, valves and fittings may, in general, be accepted in Class lll piping systems, in cargo lines within cargo oil tanks of tankers, but grey cast iron is not to be used for the following:

a. Pipes for cargo lines on weather deck of tankers intended to carry cargo oil having a flash point less than or equal to 60°C;
b. Piping intended for conveying media having temperatures above 220°C;
c. Piping may be subjected to pressure shock, excessive strains and vibration;
d. Ship—side valves and fittings and sea valves;
e. Valves fitted on the collision bulkhead;
f. Valves under static head fitted on the outside of fuel tank walls;
g. Boiler b1ow—off systems;
h. Pipes for steam, fire extinguishing, bilge and ballast systems.

Ordinary cast iron may be accepted for pressures up to 1.6 MPa and cargo oil having a flash point above 60°C for cargo oil pipe lines on weather decks of oil tankers except for manifolds and their valves and fittings connected to cargo handling hoses.

2.4.2 Nodular graphite cast iron pipes, valves and fittings

2.4.2.1 Ferritic nodular graphite iron castings for pipes, valves and fittings in Class H and Class III piping systems are to be made in a grade having a specified minimum elongation not less than 12% on a gauge length of 5.65 A , where A is the cross-sectional area of the test piece.

2.4.2.2 Ferritic nodular graphite iron pipes, valves and fittings may be accepted for bilge, ballast and liquid cargo piping.

2.4.2.3 Ferritic nodular graphite cast iron pipes, valves and fittings are not to be used in piping systems for conveying media having temperatures exceeding 350°C.

2.4.2.4 Where ferritic nodular graphite iron castings are used for ship-side pipes, valves and fittings, the properties of this material are to comply with the relevant requirements of the Rules for Materials and Welding by the Society.

2.4.2.5 Where the elongation is less than the minimum required in 2.4.2.1, the material is to be subject to the same limitations as grey cast iron.

2.4.3 Plastic pipes

2.4.3.1 The ranges and locations of plastic pipes used in ships are to comply with the provisions in Table 1 of Appendix I, and the plastic pipes are to comply with the fire endurance requirements in the Table.

2.4.3.2 Plastic pipes used on ships are to be of approved type. Approval of procedures and contents may be carried out in accordance with the relevant requirements of Appendix I.

2.4.3.3 Plastic pipes used on ships are to be selected in relation to their chemical composition, physical and mechanical properties, and temperature limits.

2.4.3.4 Plastic pipes are in general not to be used for media with a temperature above 60°C or below 0°C.

2.4.4 Flexible hoses

2.4.4.1 Short joining lengths of` flexible hoses of approved type may be used, where necessary to provide for relative movements between various items of machinery connected to permanent piping systems.

2.4.4.2 Hoses of non-metallic materials used in systems containing flammable fluids or sea water are to have at least one ply of internal wire braid.

2.4.4.3 Flexible hoses are to be provided with end fittings of approved type.

2.4.4.4 In general, the use of hose clips as a means of securing the ends of hoses is to be restricted to the diesel engine and air compressor cooling water systems where the hose consists of a short, straight length joining two metal pipes, between two fixed points on the engine or air compressor.

2.4.4.5 New types of non-metallic hoses are to be subjected to prototype pressure tests, and in no case is the bursting pressure to be less than five times the maximum working pressure in service.

2.4.4.6 Proposals for the use of non-metallic hoses in the bilge and ballast systems are to be subject to agreement of the Society.

2.4.4.7 Every hose is to be hydraulically tested to a pressure of not less than 1.5 times the maximum permissible working pressure.

Appendix 1 Production and Application of Plastic Pipes on Ships

1.1 Terms and Definitions

1.1.1"Plastic(s)" means both thermoplastic and thermosetting plastic materials with or without reinforcement, such as PVC and fibre reinforced plastics - FRP.

1.1.2. "Pipes/piping systems" means the pipes, fittings, system joints, method of joining and any internal or external liners, covering and coatings required to comply with the performance criteria.

1.1.3 "Joint" means joining pipes by adhesive bonding, laminating, welding, etc.

1.1.4 "Fitting" means bends, elbows, fabricated branch pieces etc. of plastic materials.

1.1.5 "Nominal pressure" means the maximum permissible working pressure which should be determined in accordance with the requirements in 1.3.1 of this Appendix.

1.1.6 "Design pressure" means the maximum working pressure which is expected under operation conditions or the highest set pressure of any safety valve or pressure relief device on the system, if fitted.

1.1.7 "Fire endurance" means the capability of piping to maintain its strength and integrity (i.e. capable of performing its intended function) for some predetermined period of time while exposed to fire.

1.2 Scope

1.2.1 These requirements are applicable to plastic pipes/piping systems on ships.

1.2.2 The requirements are not applicable to flexible pipes and hoses and mechanical couplings used in metallic piping systems.

1.3 General Requirements

The specification of piping is to be in accordance with a recognized national or international standard acceptable to the Society. In addition, the following requirements apply:

1.3.1 Strength

a. The strength of the pipes is to be determined by a hydrostatic test failure pressure of a pipe specimen under the standard conditions: atmospheric pressure equal to 0.1 MPa relative humidity 30%, environmental and carried fluid temperature 298 kPa (25°C) .
b. The strength cf`5ttings and joints is to be not less than that of the pipes.
c. The nominal pressure is to be determined from the following conditions:

1. *Internal Pressure*

For an internal pressure the following is to be taken whichever is smaller:

$$Pn\ int \leqslant Psth/4 \text{ or } Pn\ int \leqslant Plth/2.5\ ,$$

Where: Psth = short—teim hydrostatic test failure pressure, in MPa;

Plth = long-term hydrostatic test failure pressure (100,000 h), in MPa;

2. External Pressure

For an external pressure: $Pn\ ext \leqslant Pcol/3\ ,$

Where: Pool —· pipe collapse pressure, in MPa.

d. In no case is the collapse pressure to be less than0.3 MPa.
e. The maximum working external pressure is a sum of the vacuum inside the pipe and a head of liquid acting on the outside of the pipe.
f. The maximum permissible working pressure is to be specified with due regard for maximum possible working temperatures in accordance with manufacturer's recommendations.

1.3.2 Axial Strength

a. The sum of the longitudinal stresses due to pressure, weight and other loads is not to exceed the allowable stress in the longitudinal direction.
b. In the case of fibre reinforced plastic pipes, the sum of the longitudinal stresses is not to exceed half of the nominal circumferential stress derived from the nominal internal pressure condition (see 1.3.1 of this Appendix).

1.3.3 Impact Resistance

a. Plastic pipes and joints are to have a minimum resistance to impact in accordance with recognized national or international standards.
b. After the test the specimen is to be subjected to hydrostatic pressure equal to 2.5 times the design pressure for at least 1 h.

1.3.4 Temperature

a. The permissible working temperature depending on the working pressure is to be in accordance with Manufacturer's, but in each case it is to be at least 2D°C lower than the minimum heat distortion temperature of the pipe material, determined according to ISO 75 method A, or equivalent.
b. The minimum heat distortion temperature is to be not less than 80°C .

1.4 Requirements for Pipes/Piping System Depending on Service and/or Locations

1.4.1 Fire Endurance

a. Pipes and their associated fitting whose integrity is essential to the safety of ships are required to meet the minimum fire endurance requirements of Appendix 1 or 2, as applicable, of IMO Res. A.753 (18).
b. On the capability of a piping system to maintain its strength and integrity, there exist three different levels of fire endurance for piping systems.
    - Level 1. Piping having passed the tire endurance test specified in Appendix 1 of IMO Res. A. 753 (18) for duration of a minimum of one hour without loss of integrity in the dry condition is considered to meet level 1'tire endurance standard (L1).
    - Level 2. Piping passed the fire endurance test specified in Appendix I of HVIO Res. A 753 (18) for a duration of a minimum of 30 min in the dry condition is considered to meet level 2 fire endurance standard (L2).
    - Level 3. Piping having passed the tire endurance test specified in Appendix 2 of HMO Res. A .753 (18) for a duration of a minimum of 30 min in the wet condition is considered to meet level 3 fire endurance standard (l3).
c. Permitted use of piping depending on fire endurance, location and piping system is given in Table 1-4-1.

1.4.2 Flame Spread

a. All pipes, except those fitted on open decks and within tanks, cofferdams, pipe tunnels and ducts are to have low surface flame spread characteristics not exceeding average values listed in IMO Resolution A.653 (16).
b. Surface flame spread characteristics are to be determined using the procedure given in IMO Resolution A.6S3 (16) with regard to the modifications due to the curvilinear pipe surfaces as listed in Appendix 3 of IMO Resolution A.753(18).

1.4.3 Fire Protection Coating where a fire protective coating of pipes and fittings is necessary for achieving the fire endurance level required, it is to meet the following requirements:

a. The pipes are generally to be delivered from the manufacturer with the protective coating on.
b. The fire protection properties of the coating are not to be diminished when exposed to salt water, oil or bilge slops. It is to he demonstrated that the coating is resistant to products likely to come into contact with the piping.
c. In considering fire protection coatings, such characteristics as thermal expansion, resistance against vibrations, and elasticity are to be taken into account.
d. The fire protection coatings are to have sufficient resistance to impact to retain their integrity.

1.4.4 Electrical Conductivity

Where electrical conductivity is to be ensured, the resistance of the pipes and fitting is not to exceed $1 * 10^5$ Ω/m.

1.5 Material approval and Quality during manufacture

1.5.1 Prototypes of pipes and fittings are to be tested to determine short-term and long-term design strength, fire endurance and low surface flame spread characteristics, electrical resistance (for electrically conductive pipes) , impact resistance in accordance with IACS UR.

1.5.2 For prototype testing representative samples of pipes and fittings are to be selected to the satisfaction of the Society.

1.5.3 The manufacturer is to have quality system that meets ISO 9000 series standards or equivalent. The quality system is to consist of elements necessary to ensure that pipes and fittings are produced with consistent and uniform mechanical and physical properties.

1.5.4 Each pipe and fitting is to be tested by the manufacturer at a hydrostatic pressure not less than 1.5 times the nominal pressure.

1.5.5 Piping and fittings are to be permanently marked with identification. Identification is to include pressure ratings, the design standards that the pipe or fitting is manufactured in accordance with, and the material of which the pipe or fitting is made.

1.5.6 In case the manufacturer does not have an approved quality system complying with ISO 9000 series or equivalent, pipes and fitting are to be tested in accordance with IACS UR to the satisfaction of the Surveyors for every batch of pipes.

Table 1.4.1

Fire endurance requirements matrix

Piping system		Location										
		A	B	C	D	E	F	G	H	I	J	K
1	2	3	4	5	6	7	8	9	10	11	12	13
CARGO (FLAMMABLE CARGOES flash point ≤ 60°C)												
1 Cargo lines		NA	NA	L1	NA	NA	0	NA	0⑩	0	NA	L1②
2 Crude oil washing lines		NA	NA	L1	NA	NA	0	NA	0⑩	0	NA	L1②
3 Vent lines		NA	NA	NA	NA	NA	0	NA	0⑩	0	NA	x
INERT GAS												
4 Water seal effluent line		NA	NA	0①	NA	NA	0①	0①	0①	0①	NA	0
5 Scrubber effluent line		0①	0①	NA	NA	NA	NA	NA	0①	0①	NA	0
6 Main line		0	0	L1	NA	NA	NA	NA	NA	0	NA	L1⑥
7 Distribution lines		NA	NA	L1	NA	NA	0	NA	NA	0	NA	L1②
FLAMMABLE LIQUIDS (flash point > 60 °C)												
8 Cargo lines		x	x	L1	x	x	NA③	0	0⑩	0	NA	0
9 Fuel oil		x	x	L1	x	x	NA③	0	0	0	NA	0
10 Lubricating oil		x	x	L1	x	x	NA	NA	NA	0	NA	L1
11 Hydraulie oil		x	x	L1	x	x	0	0	NA	0	NA	L1
SEAWATER												
12 Bilge main and branches		L1⑦	L1⑦	L1	x	x	NA	0	0	0	NA	L1
13 Fire main and water spray		L1	L1	L1	x	NA	NA	NA	0	0	x	L1
14 Foam system		L1	L1	L1	NA	NA	NA	NA	NA	0	L1	L1
15 Sprinkler system		L1	L1	L3	x	NA	NA	NA	0	0	L3	L3
16 Ballast		L3	L3	L3	L3	x	0⑩	0	0	0	L2	L2
17 Cooling water essential service		L3	L3	NA	NA	NA	NA	NA	0	0	NA	L2
18 Tank cleaning service, fixed machines		NA	NA	L3	NA	NA	0	NA	0	0	NA	L3②
19 Non-essential systems		0	0	0	0	0	NA	0	0	0	0	0
FRESHWATER												
20 Cooling water essential service		L3	L3	NA	NA	NA	NA	0	0	0	L3	L3
21 Condensate return		L3	L3	L3	0	0	NA	NA	NA	0	0	0
22 Non-essential systems		0	0	0	0	0	NA	0	0	0	0	0
SANITARY/DRAINS/SCUPPERS												
23 Deck drains (internal)		L1①	L1①	NA	L1①	0	NA	0	0	0	0	0
24 Santiary drains (internal)		0	0	NA	0	0	NA	0	0	0	0	0
25 Scuppers and discharges (overboard)		0①⑧	0①⑧	0①⑧	L①⑧	0①⑧	0	0	0	0	0①⑧	0
SOUNDING/AIR												
26 Water tanks/ dry spaces		0	0	0	0	0	0⑩	0	0	0	0	0
27 Oil tanks (flash point > 60°C		x	x	x	x	x	x③	0	0⑩	0	x	x
MISCELLANEOUS												
28 Control air		L1⑤	L1⑤	L1⑤	L1⑤	L1⑤	NA	0	0	0	L1⑤	L1⑤
29 Service air (non-essential)		0	0	0	0	0	NA	0	0	0	0	0
30 Brine		0	0	NA	0	0	NA	NA	NA	0	0	0
31 Auxiliary low pressure steam (≤ 0.7 Mpa)		12	12	0⑨	0⑨	0⑨	0	0	0	0	0⑨	0⑨

ABREVIATIONS:

L1- Fire endurance test (appendix 1) in dry conditions, 60 min;
L2- Fire endurance test (appendix 1) in dry conditions, 30 min;
L3- Fire endurance test (appendix 2) in wet conditions, 30 min;
0- No fire endurance test required;
NA- Not applicable;
X- Metallic materials having a melting point greater than 925°C.

FOOTNOTES:

1. Where non-metallic piping is used, remotely controlled valves to be provided at ship's side (valve is to be controlled from outside space).
2. Remote closing valves to be provided at the cargo tanks.
3. When cargo tanks contain flammable liquids with f.p. > 60°C, "0" may replace "NA" or "X".
4. For drains serving only the space concerned, "0" may replace "L1".
5. When controlling functions are not required in statutory requirements or guidelines, "0" may replace "L1".
6. For pipe between machinery space and deck water seal, "0" may replace "L1".
7. For passenger vessels, "X" is to replace "L1".
8. Scuppers serving open decks in positions 1 and 2, as defined in regulation 13 of the International Convention on Load Lines, 1966, should be "X" throughout unless fitted at the upper end with the means of closing capable of being operated from a position above the freeboard deck in order to prevent down-flooding.
9. For essential services, such as fuel oil tank heating and ship's whistle, "X" is to replace "0".
10. For tankers where compliance with paragraph 3 (f) of regulation 13F of Annex I of MARPOL 73/78 is required, "NA" is to replace "0".

LOCATION DEFINITIONS:

A- Machinery spaces of category A: Machinery spaces of category A as defined in SOLAS* regulation II-2/3.19.
B- Other machinery spaces and pump rooms: Spaces, other than category A machinery spaces and cargo pump rooms, containing propulsion machinery, boilers, steam and internal combustion engines, generators and major electrical machinery, pumps, oil filling stations, refrigerating, stabilizing, ventilation and air-conditioning machinery, and similar spaces, and trunks to such spaces.
C- Cargo pump rooms: Spaces containing cargo pumps and entrances and trunks to such spaces.
D- Ro-ro cargo holds: Ro-ro cargo holds are ro-ro cargo spaces and special category spaces as defined in SOLAS* regulation II-2/3.14 and 3.18.
E- Other dry cargo holds: All spaces other than ro-ro cargo holds used for non-liquid cargo and trunks to such spaces.
F- Cargo tanks: All spaces used for liquid cargo and trunks to such spaces.
G- Fuel oil tanks: All spaces used for fuel oil (excluding cargo tanks) and trunks to such spaces.
H- Ballast water tanks: All spaces used for ballast water and trunks to such spaces.
I- Cofferdams, voids, etc.: Cofferdams and voids are those empty spaces between two bulkheads separating two adjacent compartments.
J- Accommodation and service spaces: Accommodation spaces, service spaces and control stations as defined in SOLAS* regulation II-2/3.10, 3.12, 3.22.
K- Open decks: Open deck spaces as defined in SOLAS* regulation II-2/26.2.2 (5).

1.6 Installation

1.6.1 Supports

Selection and spacing of pipe supports in shipboard systems are to be determined as a function of allowable stresses and maximum deflection criteria. Support spacing is not to be greater than the pipe Manufacturer! s recommended spacing. The selection and spacing of pipe supports are to take into account pipe dimensions, mechanical and physical properties of the pipe material, mass of pipe and contained fluid, external pressure, operating temperature, thermal expansion effects, loads due to external forces, thrust forces, water hammer,

vibrations, maximum accelerations to which the system may be subjected. Combination of loads is to be considered.

a. Each support is to evenly distribute the load of the pipe and its contents over the full width of the support. Measures are to be taken to wear of the pipes where they contact the supports.
b. Heavy components in the piping system such as valves and expansion joints are to be independently supported.

1.6.2 Expansion

a. Suitable provision is to be made in each pipeline to allow for relative movement between pipes made of plastic and the steel structure, due regard to:
    - The different in the coefficients of thermal expansion;
    - Deformations of the ship's hull and its structure.
b. When calculating the thermal expansions, account is to be taken of the system working temperature and the temperature at which assembly is performed.

1.6.3 External Loads

a. When installing the piping, allowance is to be made for temporary point loads, where applicable. Such allowances are to include at least the force exerted by s load (person) of 100 kg at mid-span on any pipe of more than 100 mm nominal outside diameter.
b. Besides for providing adequate robustness for all piping including open-ended piping a minimum wall thickness, complying with 1.3.1 of this Appendix, may be increased upon the demand of the Society taking into account the conditions encountered during service on board ships.
c. Pipes are to be protected from mechanical damage where necessary.

1.6.4 Strength of connections

a. The strength of connections is to be not less than that of the piping system in which they are installed.
b. Pipes may be assembled using adhesive—bonded, welded, flanged or other joints.
c. Adhesives, when used for joint assembly, are to be suitable for providing a permanent seal between the pipes and fittings throughout the temperature and pressure range of the intended application.
d. Tightening of joints is to be performed in accordance with Manufacturer's instructions.

1 .6.5 Installation of Conductive Pipes

a. In piping systems for fluids with conductivity less than 1,000 pS/ m, such as refined products and distillates use is to be made of conductive pipes.
b. Regardless of the fluid being conveyed, plastic piping is to be electrically conductive if the piping passes through a hazardous area. The resistance to earth from any point in the piping system is not to exceed 1 x 1060/m. It is preferred that pipes and fittings be homogeneously conductive. Pipes and

fittings having conductive layers are to be protected against a possibility of spark damage to the pipe wall. Satisfactory earthling is to be provided.

c. After completion of the installation, the resistance to earth is to be verified. Earthling wires are to be accessible for inspection.

1.6.6 Application of Fire Protection Coatings

a. Fire protection coatings are to be applied on the joints, where necessary for meeting the required fire endurance as for 1.4.3 of this Appendix, after performing hydrostatic pressure tests of the piping system.
b. The fire protection coatings are to be applied in accordance with Manufacturer's recommendations, using a procedure approved in each particular case.

1.6.7 Penetration of Divisions

a. Where plastic pipes pass through A or B class divisions, arrangements are to be made to ensure that the fire endurance is not impaired. These arrangements are to be tested in accordance with Recommendations for fire test procedures for A, B and C bulkheads (Resolution A.754 (18) as amended).
b. When plastic pipes pass through watertight bulkheads or decks, the watertight integrity of the bulkhead or deck is to be maintained.
c. If the bulkhead or deck is also a fire division and destruction by fire of plastic pipes may cause the inflow of liquid from tanks, a metallic shut-off valve operable from above the freeboard deck should be fitted at the bulkhead or deck.

1.6.8 Control during Installation

a. Installation is to be in accordance with the manufacturer's guidelines.
b. Prior to the work, joining techniques are to be approved by the Society.
c. The tests and examinations specified in IACS UR are to be completed before shipboard piping installation commences.
d. The personnel performing this work are to be properly qualified and certified to the satisfaction of the Society.
e. The procedure of making bonds is to include:
    - Materials used;
    - Tools and fixtures;
    - Joint preparation requirements;
    - Cure temperature;
    - Dimensional requirements and tolerances;
    - Tests acceptance criteria upon completion of the assembly.

f. Any change in the procedure which will affect the physical and mechanical properties of the joint is to require the procedure to be re-qualified.

1.6.9 Bonding Procedure Quality Testing

a. A test assembly is to be fabricated in accordance with the procedure to be qualified and it is to consist of at least one pipe—to-pipe joint and one pipe-to-fitting joint.
b. When the test assembly has been cured, it is to be subjected to a hydrostatic test pressure at a safety factor 2.5 times the design pressure of the test assembly, for not less than one hour. No leakage or separation of joints is allowed. The test is to be conducted so that the joint is loaded in both longitudinal and circumferential directions.
c. Selection of the pipes used for test assembly, is to be in accordance with the following:
   - When the largest size to be joined is 200 mm nominal outside diameter, or smaller, the test assembly is to be the largest piping size to be joined.
   - When the largest size to be joined is greater than 200 mm nominal outside diameter, tl1e size of the test assembly is to be either 200 mm or 25% of the—largest piping size to be joined, whichever is greater.
d. When conducting performance qualifications, each bonder and each bonding operator are to make up test assemblies, the size and number of which are to be as required above.

1.6.10 Testing After installation on Board

a. Piping system for essential services are to be subjected to a test pressure not less than 1.5 times the design pressure or 0.4 MPa whichever is greater.
b. Piping system for non-essential services are to be checked for leakage under operational conditions.
c. For piping required to be electrically conductive, earthing is to be checked and random resistance testing is to be conducted.

2.5 HYDRAULIC AND TIGHTNIBS TESTS

2.5.1 Tests before installation on board

2.5.1.1 All Classes land H pipes and their associated fittings and, all steam pipes, feed pipes, compressed air pipes and fuel oil pipes a pressure greater than 0.35 MPa together with their fittings are to be hydraulically tested after completion of manufacture and before and coating.

2.5.1.2 The hydraulic test pressure is not to be less than that determined by the following formula:

$$P_s = 1.5p \qquad \text{MPa}$$

Where:
p- design pressure, in MPa, see 2.1.3.1.

2.5.1.3 For steel pipes and integral fittings for use in systems where the design temperature exceeds 300 °C test pressure P, is to be determined by the following formula, but need not exceed 2 p.

$$P_s = 1.5 \frac{[\sigma]_{100}}{[\sigma]_t} p \qquad \text{MPa}$$

Where:
p- as defined in 2.5.1.2;
$[\sigma]_{100}$- permissible stress for 100 °C, in N/mm^2;
$[\sigma]_t$- permissible stress for the design temperature, in N/mm^2.

Subject to agreement of the Society, the test pressure may be reduced to 1.5 p where it is necessary to avoid excessive stress in way of bends and T-connections. In no case is the membranes stress to exceed 90% of the yield stress at the testing temperature.

2.5.1.4 When the hydraulic test of piping is carried out on board, it may be carried out concurrently with the tightness tests required after assembly on board.

2.5.1.5 For pipes with an internal diameter less than 15 mm. the hydraulic test may be waived subject to agreement of the Society.

2.5.1.6 When, for technical reasons, it is not possible to carry out complete hydro testing for all sections piping, before assembly on board, applications are to be submitted for approval to the Society for testing the closing lengths of piping, particularly in respect to closing seams.

2.5.2 Testing after assembly on board

2.5.2.1 All piping system are to be checked for leakage under working conditions.

2.5.2.2 Fuel oil piping, heating coils in tanks, bilge pipes in way of double bottom tanks or deep tanks and hydraulic piping are to be tested by hydraulic pressure in accordance with Table 2.5.2.2.

Table 2.5.2.2
Hydraulic test after assembly on board

Item	Test pressure
Fuel oil piping	1.5 times the design pressure, but not less than 0.4 Mpa
Heating coils in oil tanks	
Bilge pipes passing through double bottom tanks or deep tanks	Not less than the test pressure required for these tanks
Hydraulic piping	1.25 times the desing pressure, but need not exceed the design pressure plus 7 Mpa

2.5.2.3 Where Classes I and II pipes are butt welded together during assembly on board, they are to be tested by hydraulic pressure in accordance with the requirements of 2.5.1.1 to 2.5.1.4 after welding. During installation and before the hydraulic test is carried out, the pipe lengths may be insulated, except in way of the joints.

2.5.2.4 The hydraulic test required in 2.5.2.3 may be omitted provided are destructives tests by ultrasonic or radiographic methods carried out on the entire circumference of all butt welds with satisfactory results.

2.5.3 Hydraulic tests for pumps, valves and fittings

2.5.3.1 All components of pumps subject to pressure are to be subjected to hydraulic tests in workshop prior to assembly. The hydraulic test pressure is to be 1.5 times the design pressure, but need not exceed the design pressure plus 7 MPa.
For centrifugal pumps the design pressure is to be taken as the maximum pressure head on the performance curve. For displacement pumps the design pressure is to be taken as the relief valve setting pressure. For steam driven pumps the test pressure at the steam side is to be 1.5 times the steam working pressure.

2.5.3.2 All pressure components of valves and fittings are to be tasted by hydraulic pressure in workshop before assembly, and the test pressure is to be 1.5 times the design pressure, but need not exceed the design pressure plus 7 MPa.

2.5.3.3 Valves, cocks and distance pieces intended to be fitted on the ship side below the load waterline are to be tested by hydraulic pressure not less than 0.5 MPa.

CHAPTER 3: SHIP' S PIPING AND VENTILATING SYSTEMS

3.1 GENERAL REQUERIMENTS

3 .1.1 Application

3.1.1.1 The requirements of this Chapter apply to piping and ventilating system on all types of ships except where otherwise stated.

3.1.2 Materials

3.1.2.1 Except where otherwise stated in this Chapter, pipes, valves and fittings are to be made of steel, cast iron, copper, copper alloy, or other approved material suitable for the intended service.

3.1.2.2 Materials sensitive to heat, such as aluminium, lead or plastics are not to be used in systems essential to the safe operation of the ship, or in systems conveying combustible liquids or sea water where leakage or failure could result in fire or in flooding of watertight compartments. For the use of plastic pipes, see 2.4.

3.1.3 Valve

3.1.3.1 All valves are to be so constructed as to prevent the possibility of valve covers or glands being slackened hack or loosened when the valves are operated.

3.1.3.2 Valves on board ships are to be of such construction that the closing of which is obtained by clockwise rotation of the hand wheel, and the opening by counter-clockwise rotation.

3.1.3.3 Valves and cocks are to be fitted with nameplates to indicate their purposes.

3.1.3.4 All valves which are provided with remote control are to be arranged for local manual operation, independent of the remote operating mechanism. Opining and/or closing of the valves by local manual means is not to render the remote control system inoperable.

3.1.3.5 Valves, cocks, pipes or other fittings attached direct to the plating of tanks, and to bulkheads, flats or tunnels which are required to be of watertight construction, are to be seemed by means of studs screwed into but not penetrating through the pads welded on the plating. Alternatively, the studs or the bulkhead piece may be welded to the plating.

3.1.4 Ship-side valves and fittings (other than those on scuppers and sanitary discharges)

3.1.4.1 All sea inlet and overboard discharge pipes are to be fitted with valves or cocks secured direct to the shell plating, or to the plating of fabricated steel sea chests attached to the shell plating. The installation of the valves or cocks is to comply with the following requirements in (a) or (b):

a. The valves or cocks are to be secured by means of studs screwed into but not penetrating through the pads welded on the shell plating or sea chests.
b. The valves or cocks may be secured to the distance piece welded on the shell plating or sea chests. The thickness of the distance piece is to comply with the requirements in Table 5.3.4.2. The distance piece is to be adequately strengthened as to ensure its rigidity.

3.1.4.2 All suction and valves and cocks secured direct to the shell plating of the ship are to be fitted with spigots passing through the plating, but the spigots on the valves or cocks may be omitted if these fittings are attached to pads or distance pieces which themselves form spigots in way of the shell plating. Blow-off valves or cocks are also to be fitted with a protection ring through which the spigot is to pass, the ring being on the outside of the shell plating.

3.1.4.3 Blow-off valves or cocks on the ships side are to be fitted in accessible positions above the level of the working platform, and are to be provided with indicators showing whether they are open or shut.

3.1.4.4 It is to be avoided to locate the overboard discharges in way of the areas where the lifeboats and accommodation ladders are lowered. Where this is not practicable, suitable means are to be provided to prevent any discharge of` water into the lifeboats or onto the accommodation ladders.

3.1.4.5 Sea inlet and overboard discharge valves and cocks are in all cases to be fitted in easily accessible positions and, so far as practicable, are to be readily visible. Indicators are to be provided local to the valves and cocks, showing whether they are open or shut. The hand wheel of main sea inlet valve is to be situated above the lower platform, generally 460 mm above.

3.1.4.6 Gratings are to be fitted at all openings in the ships side for sea inlet valves and sea chests. The direction of grating bars is to be in line with the length of the ship. The net area through the gratings is to be not less than twice that of the valves connected to the sea inlets, and provision is to be made for clearing the gratings by use of low pressure steam or compressed air.

3.1.4.7 Ship—side valves and fittings as well as sea chests, if made of steel, are to be suitably protected against wastage.

3.1.4.8 Sea chests are to be so arranged as to avoid the formation of air pocket. Where a vent pipe is fitted on the top of the sea chest, a screw-down valve is to be fitted at the root of the vent pipe. The open end of the vent pipe is to be extended to a position above the bulkhead deck or to be led overboard in the vicinity of the bulkhead deck and a ship—side screw-down valve is to be fitted.

3.1.4.9 For sea connections for ships having ice notations, see relevant provisions specified in Chapter 14.

3.1.5 Miscellaneous

3.1.5.1 Wash deck pipes and discharge pipes from the pumps to domestic water tanks are not to be led through cargo holds.

3.1.5.2 Where relief valves are fitted in sea water systems, these valves are to be fitted in readily visible positions above the platform. The arrangements to be such that any discharge from the relief valves will also be readily visible.

3.1.5.3 For ships required for subdivision and damage stability, the arrangement is to ensure that the continuing flooding will not extend to the compartments other than those with assumption of flooding, provided the pipeline s, casing or tunnel is fitted in the assumed flooding compartments.

3.2 DRAINAGE OF COMPARTMENTS, OTHER THAN MACHINERY SPACES

3.2.1 General requirements

3.2.1.1 All ships are to be provided with efficient bilge pumping systems, capable of pumping from and draining any watertight compartment, other than a space permanently appropriated for the carriage of fresh water, water ballast, oil fuel or liquid cargo , and any other space where efficient means of pumping are available under all practical conditions. Efficient means are to be provided for draining water from insulated holds. For their particular requirements see relevant provisions specified in Chapter 4 of PART FIVE.

3.2.1.2 The suctions and means for drainage are to be so arranged that any water within any compartment of the ship, or any watertight section of any compartment, can be pumped out through at least one suction when the ship is on an even keel and is either upright or has a list of not more than 5° . For this purpose, wing suctions will generally be necessary, except in short, narrow compartments where one suction can provide effective drainage under the above conditions.

3.2.1.3 In passenger ships, the bilge pumping plant is to be capable of any watertight compartment which is neither a permanent oil compartment nor a permanent water compartment under all practicable conditions after a casualty, whether the ship is upright or listed.

3.2.2 Cargo holds

3.2.2.1 The bilge suctions in cargo holds are to be arranged in accordance with Table 3.2.2.1.

Table 3.2.2.1
Bilge suction arrangements in cargo holds

Cargo holds condition		Suction arrangement in each cargo hold
Without double bottom	Bottom shell slopping down to the center line ≥ 5°	One near center line at after end
	Bottom shell slopping down to the center line < 5°	One on each side at after end
With double bottom	Inner bottom plating extending to ship's side and forms bilges at the wings	One on each side
	Inner bottom slopping down to the center line	One near center line
	Inner bottom plating extending to ship's side and not forming bilge	One bilge well with suction on each side
In ships having only one hold, and the length of the hold exceeds 35m		Fitted in forward half-length and after half-length of the hold
In narrow holds at the ends of ships		One near center line

3.2.3 Holds and deep tanks for alternative carriage of liquid or dry cargo

3.2.3.1 Where the inner bottom is slopping down to the centre line with an angle of not less than 5°, one centre suction only will be accepted and the wing suctions may be omitted.

3.2.3.2 In holds and deep tanks for alternative carriage of liquid or dry cargo, the liquid cargo and water ballast filling and suction pipes are to be provided with blanking flanges or other equivalent means, also the bilge suction pipes are to be provided with blanking flanges in way of the bulkheads, so as to isolate the filling and suction pipes when the hold or tank is being used for the carriage of dry cargo, and to isolate the bilge suction pipes when the hold or tank is being used for the carriage of liquid cargo or water ballast.

3.2.4 Fore peaks, alter peaks and cofferdams

3.2.4.1 Where the peaks are used as dry compartments, the drainage of both peaks is to be effected either by a power pump branch bilge suction or a hand pump suction. In the latter case, the suction lift is in no case to exceed 7 m.

3.2.4.2 The collision bulkhead may be pierced below the margin line for passenger ships by not more than one pipe for dealing with fluid in the fore peak tank. If the forepeak is divided to hold two different

kinds of liquids, the collision bulkhead of each compartment may be allowed to be pierced below the margin line for passenger ships by one pipe.

3.2.4.3 The pipe piercing the collision bulkhead is to be fitted with a screwdown valve capable of being operated from above the freeboard deck (bulkhead deck for passenger ships), the valve chest being secured to the bulkhead inside the forepeak and means being provided for indicating whether the valve is open or shut.
The above-mentioned valve may be fitted on the after side of the collision bulkhead provided that the valves are readily accessible under all service conditions and the space in which they are located is not a cargo space, and it is not necessary to fit an operating device above the freeboard deck. All valves are to be of steel, bronze or other approved ductile material. Valves of ordinary cast iron or similar material are not acceptable.

3.2.4.4 Suitable drainage arrangements are to be provided in cofferdams.

3.2.5 Spaces above fore peaks, after peaks and machinery spaces

3.2.5.1 The chain locker and the watertight compartments above the fore peak tank are to be drained by hand pump or power pump bilge suctions. Other effective means of drainage are also acceptable.

3.2.5.2 Steering gear compartments or other small enclosed spaces situated above the after peak tank are to be drained either by hand pump or power pump bilge suctions. Such compartments may also be drained by scuppers of not less than 38 mm bone, discharging to the shaft tunnels (or machinery space in the ease of ships with machinery aft) and fitted with self-closing cocks or shut-off valves situated in well and easily visible positions.

3.2.6 Shatt tunnel and pipe tunnel

3.2.6.1 The shaft or pipe tunnel is, in general, to be drained by a branch bilge suction at the after end of the tunnel. Where water might accumulate at the forward end of the tunnel or the length of the tunnel is more than 35 m, an additional bilge suction is required.

3.3 BILGE DRAINAGE OF MACHINERY SPACE

3.3.1 General requirements

3.3.1.1 The bilge drainage arrangements in the machinery space are to be such that any water which may enter this compartment can be pumped out through at least two bilge suctions when the ship is on an even keel, and is either upright or has a list of more than 5°. One of these suctions is to be a branch bilge suction, and the other is to be a direct bilge suction.

3.3.1.2 In passenger ships, the drainage arrangements are to be such that machinery spaces can be pumped out under all practical conditions after a casualty, whether the ship is upright or listed.

3.3.2 Bilge suction arrangements in machinery spaces

3.3.2.1 The bilge suctions in machinery spaces are to be arranged in accordance with Table 3.3.2.1.

Table 3.3.2.1
Bilge suction arrangements in machinery spaces

Condition of machinery spaces		Branch bilge suction	Direct bilge suction
Without double bottom	Bottom shell slopping down to the center line ≥ 5°	One near center line	One near center
	Bottom shell slopping down to the center line < 5° and all passenger ships	One near center line and one on each side	One near center
Without double bottom	Inner bottom extends the full length of the machinery space and forms bilges at the wings	One on each side	One on each side
	Inner bottom extends the full length and breadth of the machinery space	One bilge well with one suction on each side	One bilge well with one suction on each side
Ships with propelling machinery aft		In general, one branch suction on each side at the fore end and one branch suction at the after end; and in addition one direct bilge suction on either side at the fore end and one direct bilge suction at after end; provided emergency bilge suction is to be fitted on the side at the fore end and comply with the requirements of 3.3.3.1 or 3.3.3.3, the direct bilge suction may be omitted.	
Boiler room or auxiliary engine room separated from the main engine room by watertight bulkheads; separate motor room of electrically propelled ships		Same as for cargo holds	At least one for each watertight compartment

3.3.2.2 Additional bilge suctions may be required by the Society for the drainage of depressions in the tank top formed by crank-pits, or other recesses, by tank tops having inverse camber or by discontinuity of the double bottom.

3.3.2.3 In ships propelled by electrical machinery, in addition to the branch bilge suctions and direct bilge suctions arranged appropriate to the conditions of machinery space, special means are to be provided to prevent the accumulation of bilge water under the main propulsion generators and motors.

3.3.2.4 In passenger ships, each independent bilge pump is to have direct bilge suction from the space in which it is situated, but not more than two such suctions are required in any one space. Where two or more such suctions are provided, there is to be at least one suction on each side of the space.

3.3.3 Emergency bilge suctions of machinery spaces

3.3.3.1 In addition to the bilge suctions required in 3.3.2.1 to 3.3.2.4, an emergency bilge suction is to be provided in each main machinery space. This suction is to be led to a main cooling water pump and is to be fitted with a screw—down non—return valve having the spindle so extended that the hand wheel is above the bottom platform, generally 460 mm above.

3.3.3.2 In ships with steam propelling machinery, the emergency suction is to have a diameter of at least 2/3 that of the main circulating pump suction. In other ships, the diameter of suction is not to be less than the diameter of the pump suction.

3.3.3.3 Where main cooling water pumps are not suitable for bilge pumping duties, the emergency bilge suction is to be led to the largest power pump which is not a bilge pump. This pump is to have a capacity not less than that required for a bilge pump, and the bilge suction is at least to be the same size as that of the pump suction branch.
Where the pump to which the emergency bilge suction is connected is of the self—priming type, the direct bilge suction on the same side of the ship may be omitted, except in passenger ships.

3.3.3.4 Emergency bilge suction valves are to be provided with permanent nameplates clearly indicating their purpose.

3.4 BILGE PUMPS AND BILGE PIPING

3.4.1 Number of bilge pumps

3.4.1.1 The number of power bilge pumps for each ship is to comply with the requirements of Table 3.4.1.1.

Table 3.4.1.1
Number of power bilge pumps

Type of ship		Independent power pump	Main engine driven or independent power pump
Passenger ships	Criterion of service numeral ≥ 30	3	1
	Criterion of service numeral < 30	2	1
Ships other than passenger ships	Length of ship > 91.5	2	_
	Length of ship ≤ 91.5m	1	1

3.4.1.2 Each bilge pump prescribed in 3.4.1.1 may be substituted by a pumping unit consisting of several pumps. The total capacity of each pumping unit is not to be less than the capacity of a bilge pump specified in 3.4.2.4.

3.4.1.3 Independent power sanitary, ballast and general service pumps may be accepted as independent power bilge pumps, provided they are of the required capacity of the self-priming type or with the self-priming arrangement and connected to the bilge main.

3 .4.1.4 For ships other than passenger ships, an ejector with an adequate pressure of water supply from a sea water pump and connected to the bilge piping may be accepted as an independent power bilge pump.

3.4.2 Type and capacity of bilge pumps

3.4.2.1 All power bilge pumps are to be of the self-priming type, or with the self-priming arrangements.

3.4.2.2 Cooling water pumps having emergency bilge suctions need not be of the sell`-priming type, or with self-priming arrangements.

3.4.2.3 Each power bilge pump is to be capable of giving a speed of water through the required main bilge pipe of not less than 2 m per second.

3.4.2.4 The capacity of each bilge pump Q is to be not less than the value calculated by the following formula:

$$Q = 5.66 d_1^2 \times 10^{-3} \quad m^3/h$$

Where:
d_1 - internal diameter of bilge main, obtained from the formula specified in 3.4.3.1, in mm.

3.4.2.5 In ships other than passenger ships, where one bilge pump is of slightly less than the Rules capacity, the deficiency may be made good by an excess capacity of the other pumps. In general, this deficiency is to be limited to 30%.

3.4.3 Bilge pipe systems

3.4.3.1 The internal diameter dl of the bilge main is to be calculated the following formula. However, the actual internal diameter of the bilge main may be rounded off to the acceptable nearest standard size.

$$d_1 = 25 + 1.68\sqrt{L(B + D)} \qquad \text{mm}$$

Where:
L- length of ship, in m; (the length of the ship is length measured between perpendiculars taken at the extremities of the deepest subdivision load line)
B- breadth of ship, in m; (Breadth of the ship is the extreme width from outside of frame to outside of frame at or below the deepest subdivision load line).
D- moulded depth of ship to bulkhead deck, in m.

3.4.3.2 In no case is the internal diameter of the bilge main to be less than that required for the largest branch bilge line.

3.4.3.3 The internal diameter of branch bilge suction pipes fitted in cargo and machinery spaces is to be not less than the value determined by the following formula, but the actual internal diameter of branch bilge suction pipes may be rounded off to the acceptable nearest standard size:

$$d_2 = 25 + 2.15\sqrt{l(B + D)} \qquad \text{mm}$$

Where:
d_2 - internal diameter of branch bilge suction pipe, in mm;
l - length of compartment, in m;
B - breadth of ship, in m;
D - moulded depth of ship to bulkhead deck, in m.

3.4.3.4 In general, no branch bilge suction pipe is to be less than 50 mm bore.

3.4.3.5 In no case is the internal diameter of the direct bilge suction to be less than that for the main bilge line.

3.4.3.6 The branch bilge suction pipe to the tunnel well is, in general, to be not less than 65 mm bore.

3.4.3.7 The area of each branch pipe connecting the bilge main to a distribution chest is to be not less than the sum of the areas required in the Rules for the two largest branch bilge suction pipes connected to that chest, but need not be greater than that required for the main bilge line.

3.4.3.8 For the calculation of internal diameter of the bilge suction pipes in oil tankers, see Chapter 5.

3.4.4 Bilge Pumps and pipe connections

3.4.4.1 The connections at the bilge pumps are to be such that at least one of the pumps may continue in operation when the other pumps are being opened up for overhaul.

3.4.4.2 The arrangements of pump and pipelines are such that the working of any of the pumps so connected is unaffected by the other pumps being in operation at the same time.

3.4.4.3 All bilge suction pipes are to be independent of other piping up to the bilge pump suction valve chest.

3.4.5 Non-return arrangements

3.4.5.1 For the purpose of preventing the possibility of one watertight compartment being placed in communication with another, or of dry cargo spaces, machinery spaces or other dry compartments being placed in communication with the sea or with tanks, screw-down non-return valves are to be provided in the following fitting:

a. Bilge valve distribution chests;
b. Bilge suction hose connection, whether fitted direct to the bilge pump or on the main bilge line;
c. Direct bilge suctions;
d. Bilge pumps connections to main bilge line.

3.4.6 Blanking arrangements

3.4.6.1 In the case of deep tanks and cargo holds which may be used for either water ballast or dry cargo, provision is to be made for blank the water ballast filling and suction pipes when the tank or hold is being used for the carriage of dry cargo, and for blank the bilge suction pipes when the tank or hold is being used for the carriage of water ballast.
For arrangements when oil fuel or cargo oil (having a flash point above 60°C) is carried in deep tanks, see 4.2.11.1.

3.4.7 Bilge pipes in way of deep tanks and double bottom tanks

3.4.7.1 In way of deep tanks, bilge pipes are preferably to be led through pipe tunnels but, where this is not done, the pipes are to have a wall thickness in accordance with Table 2.2.2.6(l), with welded joints or other reliable joints. The number of joints is to be kept to a minimum.

3.4.7.2 Expansion bends, not glands, are to be fitted to these pipes within the deep tanks, and the open ends of the bilge suction pipes in the holds are to be fitted with non-retum valves of the approved type.

3.4.7.3 Bilge suction pipes are not to be led through double bottom tanks as far as practicable. Bilge pipes which have to pass through these tanks are to have a wall thickness in accordance with Table 2.2.2.6(1).

3.4.7.4 Expansion bends, not glands, are to be fitted to these pipes within the double bottom tanks.

3.4.7.5 The pipes are to be tested after installation, to a pressure not less than that required for the deep or double bottom tanks through which they pass.

3.4.8 Bilge lining

3.4.8.1 Where the inner bottom plating in machinery spaces or cargo holds extends to the ships side and does not form bilges, the bilge suctions are to be arranged bilge wells. The bilge wells are to be formed of steel plates and are to be not less than 0.15 m3 in capacity.

3.4.8.2 Each branch bilge suction and each direct bilge suction in machinery spaces and tunnels (excluding emergency suctions) are to be led from easily accessible mud boxes fitted with straight tail pipes to the wells or bilges. Strum boxes are not to be fitted to the lower ends of these tail pipes or to the emergency bilge suctions.

3.4.8.3 The open ends of bilge suctions in holds and other compartments outside machinery spaces and tunnels are to be enclosed in strum boxes having perforations of not more than 10 mm diameter, whose combined area is not less than twice that required for the suction pipe. The strum boxes are to be so constructed that they can be easily removed and replaced for cleaning.

3.4.8.4 Bilge valves, cocks and mud boxes are as far as possible to be fitted at, or above, the machinery space and tunnel platforms. Where they are situated just below the platform, provided readily removable traps or covers are to be fitted, and nameplates are to be fitted to indicate the presence of these fittings.

3.4.9 Miscellaneous

3.4.9.1 The design, construction and arrangement of sludge tanks and standard discharge connections are to comply with the provisions of relevant international conventions.

3.4.9.2 Bilge piping systems are to be so arranged as to meet the relevant requirements for the prevention of pollution from ships.

3.5 ADDITIONAL REQUIREMENTS FOR BILGE DRAINAGE FOR PASSANGER SHIPS

3.5.1 Arrangement of bilge pumps and bilge main

3.5.1.1 In passenger ships the required power bilge pumps are to be placed, if practicable, in separate watertight compartments. If the and boilers are in two or more watertight compartments, the bilge pumps are to be distributed throughout these compartments so far as is possible.

3.5.1.2 In passenger ships of 91.5 m or more in length, or having a criterion numeral of 30 or more, the arrangements are to be such that at least one of the power bilge pumps will be available for use in all ordinary circumstances in which the ship may be flooded at sea. This requirement will be satisfied if:

a. One of the pumps is a reliable emergency pump of a submersible type its source of power situated above the bulkhead deck;
b. The pumps and their sources of power are so disposed throughout the length of the ship that, under any conditions of flooding which the ship is required to withstand, at least one pump in an undamaged compartment will be available.

3.5.1.3 The bilge main is to be so arranged that no part is situated nearer the side of the ship than B /5 (B is the ship breadth), measured at right angles to the centreline at the level of the deepest subdivision load line.

3.5.1.4 Where any bilge pump or its pipe connection to the bilge main is situated outboard of the B /5 line, then a non-retum valve is to be provided in the pipe connection at the junction with the bilge main. The emergency bilge pump and its connections to the bilge main are to be so arranged that they are situated inboard of the B/5 line.

3.5.2 Arrangement of bilge pipes

3.5.2.1 Provision is to be made to prevent the compartment served by any bilge suction pipe being flooded in the event of the pipe severed, or otherwise damaged by collision or grounding in any other compartment . For this purpose, where the pipe is at any part situated nearer the side of the ship than B /5 or in a duct keel, a non-retum valve is to be fitted to the pipe in the compartment containing the open end.

3.5.2.2 All the distribution boxes, valves and cocks in connection with the bilge pumping arrangements are to be in positions which are accessible at all times under ordinary circumstances. They are to be so arranged that, in the event of flooding, one of the bilge pumps may be operative on any compartment. In addition, damage to a pump or its pipe connecting to the bilge main situated outboard of B/ 5 line is not

to put the bilge system out of action. If there is only one system of pipes common to all the pumps, the necessary cocks or valves for the bilge suctions must be capable of being operated from above the bulkhead dock. Where in addition to the main bilge pumping system an emergency bilge pumping system is provided, it is to be independent of the main system, and so arranged that a pump is capable of on any compartment under flooding conditions. In this case only the cocks and valves necessary for the operation of the emergency system need be capable of being operated from above the bulkhead deck.

3.5.2.3 All cocks and valves mentioned in 3.5.2.2 which can be operated from above the bulkhead deck are to have their controls at their place of operation clearly marked and provided with means to indicate whether they are open or closed.

3.6 ADDITIONAL REQUIREMENTS FOR BIDGE DRAINAGE FOR OIL TANKERS, SHIPS CARRYING DANGEROUS GOODS, SPECIAL CATEGORY SPACES BELOW THE BULKDECK AND PERIODICALLY UNATTENDED MACHINERY SPACES

3.6.1 Additional requirements for bilge drainage for oil tankers

3.6.1.1 For the additional requirements for bilge drainage for oil tankers, see relevant provisions of 5.3.

3.6.2 Additional requirements for bilge drainage for strips carrying dangerous goods

3.6.2.1 Where it is intended to carry flammable or toxic liquids in enclosed cargo spaces the bilge pumping systems are to be so designed as to guard against inadvertent pumping of such liquids through machinery space piping or pumps.

Where large quantities of such liquids are carried, consideration is to be given to the provision of additional means of draining such cargo spaces. These means are to be to the satisfaction of the Society.

3.6.2.2 For ro-ro cargo spaces where a fixed pressure water-spraying system is required, the drainage and pumping arrangements are to be such as to prevent the build-up of free water surfaces. If this is impracticable the adverse effect upon stability of the added weight and free surface of water is to be taken into account.

3.6.3 Additional requirements for bilge drainage for special category spaces below me bulkhead deck

3.6.3.1 Pumping and drainage facilities are to be provided in special category spaces below the bulkhead deck for draining large quantities of water accumulation on the deck or tank top on consequence of the operation of the fixed pressure water-spraying system.

3.6.4 Additional requirements for bilge drainage for periodically unattended machinery spaces

3.6.4.1 For the additional requirements of bilge drainage for periodically unattended machinery spaces, see relevant provisions of these regulations.

3.7 DRAINAGE ARRANGEMENTS FOR NON-SELF-PROPELLED SHIPS

3.7.1 Hand pumps

3.7.1.1 Where auxiliary powers not provided, at least two hand pumps are to be fitted to permit the efficient drainage of all the compartments.

3.7.1.2 The hand pumps are to be capable of being operated from the upper deck or from positions above the load waterline which are at all times readily accessible. The suction lift is not to be in excess of 7 m.

3.7.1.3 The internal diameter d of the hand pump suction is not to be less than the value determined by the following formula:

$$d = 0.01T + 50 \quad \text{mm}$$

Where:
d- Internal diameter of pump suction, in mm;
T- Tonnage under upper deck, in tons.

Where the ship is subdivided into small watertight compartments, 50 mm bore suction will be accepted. The internal diameter of the water cylinder of piston pumps is not to be less than twice the required diameter of the suction.

3.7.2 Ships with auxiliary power

3.7.2.1 In ships in which auxiliary power is available on board, power pumps and suctions are to be provided for dealing with the drainage of tanks and of the bilges of the principal compartments.

3.7.2.2 The bilge pumping and piping arrangements are to be as required for self-propelled ships so far as these requirements are applicable and details of the arrangements are to be submitted to the Society for approval.

3.8 BALLAST AND SCUPPER SYSTEMS

3.8.1 Ballast piping

3.8.1.1 The arrangement of ballast piping and the number of suctions are to be such that any ballast tank can be filled or under normal service conditions, whether the ship is upright or listed.

3.8.1.2 Where the ballast tanks exceed 35 m in length, they are n0rma.lly to be fitted with bilge suctions at their forward and aft ends.

3.8.1.3 The arrangement of ballast piping is to be such as to prevent the possibility of water passing from the sea or from ballast tanks into dry cargo and machinery spaces or other dry compartments.

3.8.1.4 Ballast water pipes are not to pass through drinking water, feed water or lubricating oil tanks. Where it is unavoidable, the wall thickness of ballast pipes in drinking water, feed water or lubricating oil tanks is to comply with the provisions in Table 2.2.2.6(1) and welded joints are to be adopted.

3.8.1.5 The ballast piping is not to be in connection with the bilge pipes from dry cargo and machinery spaces, nor with the pipes from oil tanks. However, this requirement need not be applied to the pipes located between distribution boxes and pump suctions or between pumps and overboard discharges, nor to the pipes detailed in 3.8.1.6 below.

3.8.1.6 Where the compartments (including deep tanks) are used for alternative carriage of dry cargo or oil or ballast water, provision is to be made for isolating or blank the ballast lines. This requirement is also applicable to the drinking water tanks which may be used as ballast tanks, so as to avoid the interconnection of the two systems. The arrangement for the discharge of oily ballast water is to be in accordance with the relevant requirements for the prevention of pollution from ships.

3.8.1.7 ln general, oil tankers of 150 gross tonnage and above, all passenger ships, and other ships of4,000 gross tonnage and above are not to carry ballast water in oil fuel tanks. If it is necessary to do so, provisions are to be made for the prevention of pollution from the ships.

3. 8.1.8 For the requirements of ballast system in oil tankers, see the relevant provisions set forth in 5.3.

3.8.2 Scupper and sanitary discharges

3.8.2.1 For the requirements of scuppers and sanitary discharges, see relevant provisions of these regulations.

3.9 REMOTELY CONTROLLED BILGE AND BALLAST SYSTEMS

3.9.1 Arrangement

3.9.1.1 lf a main bilge line for the cargo holds is arranged, this is to be placed in a pipe tunnel, and the branch bilge suctions from the main are to be fitted with remotely controlled valves.

3.9.1.2 The main bilge line for cargo holds is to be dimensioned as the machinery space main bilge line, and is to be placed as high as possible in the pipe tunnel.

3.9.1.3 The main bilge line for cargo holds is to be fitted with a shut-off valve in the machinery space.

3.9.2 Valves

3.9.2.1 The remotely controlled valves in branch suction lines of the bilge are to be screw-down non-retum valves or shut-off and non-return valves connected in series.

3.9.3 Pumps

3.9.3.1 Operating indications of the remotely controlled bilge and ballast pumps are to be provided at the remote control panel.

3.10 AIR, OVERFLOW AND SOUNDING PIPES

3.10.1 General requirements

3.10.1.1 The cargo mentioned in this part is the oil a flash point above 60 °C: .

3.10.1.2 Air, overflow and sounding pipes are to be made of steel or other approved material.

3.10.1.3 Nameplates are to be affixed to the upper ends of all air and sounding pipes.

3.10.1.4 In addition to complying with the requirements of 3.10, air pipes are to be in compliance with the provisions of these regulations.

3.10.2 Arrangement of air pipes

3.10.2.1 Air pipes are to be provided for tanks intended to carry water, oil fuel and lubricating oil, and also for cofferdams and pipe tunnels. '1`he shaft tunnel is to be provided with air pipes if necessary. Air pipes are to be fitted at the highest part of the tanks and far apart from the filling pipes.

3.10.2.2 Tanks having top plates not less than 7m either in length or in width are to be provided with or more air pipes arranged suitably apart. Where the tank top is of unusual or irregular profile, the number and positions of the air pipes will be decided in each case.

3.10.2.3 Tanks with cathodic protection are to have air pipes fitted forward and aft.

3.10.2.4 All double bottom tanks are to be fitted with air pipes. The double bottom tanks extending Bum side to side of the ship are to be fitted with air pipes led from both sides.

3.10.2.5 Location and arrangements of vent pipes for fuel oil service, and lubrication oil tanks are to be such that in the event of a broken vent pipe this will not directly lead to the risk of ingress of seawater splashes or rainwater.

3.10.2.6 The arrangement of the air piping is to be such that in the event of any one of the tanks being damaged, tanks situated in other watertight compartments of the ships cannot be flooded from the sea through combined air pipes.

3.10.3 Termination of air pipes

3.10.3.1 Air pipes to the following tanks and cofferdams are to be led to the open above the freeboard deck:

a. Fuel oil tanks;
b. Cargo oil tanks;
c. Heated lubricating oil tanks and hydraulic oil tanks;
d. Tanks, situated outside machinery spaces, which are not fitted with overflow pipes and can be pumped up;
e. Cofferdam adjacent to fuel oil tanks or cargo oil tanks.

3.10.3.2 Air pipes to the following tanks and cofferdams other than those prescribed 3.10.3.1 are to be led to above the bulkhead deck:

a. Double bottom tanks;
b. Deep tanks extending to shell plating;
c. Tanks which can be directly flooded from the outboard and seawater case;
d. Other cofferdams.

3.10.3.3 The height of air pipes extending from the freeboard deck or superstructure deck to the point where water may have access below is to comply with the following requirements:

a. On the freeboard deck, not less than760 mm;
b. On the superstructure deck, not less than 450 mm.

Where decks are fitted with wooden sheathing, those heights are to be measured above deck sheathing.

3.10.3.4 Air pipes from lubricating oil storage tanks or fuel oil draining tanks with a volume less than 0.5 m^3 and which cannot be pumped up may terminate in the machinery space, provided that the open ends are so situated that issuing oil cannot come into contact with electrical equipment or heated surfaces.

3.10.3.5 The open ends of air pipes to oil fuel and cargo oil tanks are to be situated where no danger will be incurred from issuing oil or vapour.

3.10.3.6 The open ends of air pipes to oil fuel and cargo oil tanks are to be furnished with a wire gauze diaphragm of corrosion-resistant material which can be readily removed for renewal.

3.10.3.7 The wire gauze diaphragm at the open ends of air pipes is to have a clear area not less than the cross-sectional area required for the air pipe.

3.10.3.8 The open ends of all air pipes extending above the weather deck are to be provided with efficient and suitable closing appliances to prevent any entry of water from the sea under heavy weather conditions.

3.10.4 Size of air pipes

3.10.4.1 In the case of all tanks which can be pumped up, either by the ship's pumps or by shore pumps through a filling main, the total cross-sectional area of the air pipes to each tank is to be not less than 25% greater than the effective area of the respective filling pipes.
In any case, the internal diameter of air pipes is to be not less than 50 mm.

3.10.4.2 Where overflow pipes are fitted as specified in this part, the sectional area of the air pipes is to be at least 20% of that of the filling pipes.
When an air pipe serves several tanks all having overflow pipes as specified in this part, the sectional area of the air pipe is to be at least 20% of the combined area of the two largest filling pipes for the separate tanks.

3.10.4.3 For ships navigating in ice, the cross—sectional area of air pipes is to be adequately increased.

3.10.4.4 Where tanks form part of the structure of the ship, the wall thickness of air pipes is to comply with Table 2.2.2.6(1).

3.10.4.5 Air pipes to shaft tunnels and pipe tunnels are to have an internal diameter not less than 75 mm.

3.10.5 Arrangement of over flow pipes

3.10.5.1 Fuel oil settling tanks, fuel oil service tanks, and all tanks which can be pumped up are to be fitted with overflow pipes, when the pressure head corresponding to the height of the air pipe is greater

than that for which the tanks are suitable, or when the sectional area of the air pipe is less than that required in 3.10.4.1.

3.10.5.2 In the case of oil fuel and lubricating oil tanks, the overflow pipe is to be led to an overflow tank of adequate capacity or to a storage tank having a space reserved for overflow purposes. Overflow pipes from tanks, other than oil fuel and lubricating oil tanks, are to be led to the open or to suitable overflow tanks.

3.10.5.3 A well illuminated sight glass is to be provided in the overflow pipe, and so far as possible at a place where the transfer pump can be stopped, or alternatively, an alarm device is to be provided to give warning either when the tanks are overflowing or when the oil reaches a predetermined level in the tanks.

3.10.5.4 Shut-off valves or cocks are not allowed to be fitted to the overflow pipes.

3.10.6 Size of overflow pipes

3.10.6.1 The sectional area of overflow pipe (s) from meh tank is not to be less than 1.25 times that of the filling pipe(s).

3.10.7 Prevention of cross flow through the overflow pipes

3.10.7.1 Where overflows from deep tanks which are used for the alternative carriage of fuel oil, cargo oil, water ballast, or dry cargo are connected to an overflow main of other tanks, arrangements are to be made to prevent the overflowing of liquid, gases, etc. from other tanks into the deep tank carrying dry cargo, as well as to prevent the overflowing of liquid into other tanks from the deep tank carrying the liquid.

3.10.7.2 The arrangement of the overflow system is to be such that in the event of any one of the tanks being bilged, tanks situated in other watertight compartments of the ship cannot be flooded from the sea through the overflow main.

3.10.8 Sounding pipes

3.10.8.1 Sounding pipes are to be provided for all tanks, cofferdams and pipe tunnels as well as the bilges or bilge wells which are not at all times readily accessible. All sounding pipes other than the short ones are to be led to positions above the bulk head deck which area at all times accessible and, in the case of oil fuel tanks and lubricating oil tanks, the sounding pipes are to be led to safe positions on the open deck. The sounding pipes are to be fitted as near the suctions as practicable.

3.10.8.2 Devices of approved type may be used in lieu of pipes for tanks. These devices are to be tested, after fitting on board, to the satisfaction of the Surveyors.

3.10.8.3 All soundings pipes exposed to sea and weather are to be provided with permanently attached effective means of closing to prevent the free entry of water.

3.10.8.4 Safe and efficient means are to be provided to ascertain the amount of fuel oil, lubricating oil or other flammable liquid left in any tank. Sounding pipes with upper ends terminated at safe positions and with suitable means of closing may serve this purpose. Other means of ascertaining the amount of contents in these tanks are to meet the requirements as prescribed in 3.10.8.5 and 3.10.8.6.

3.10.8.5 In passenger ships, devices for oil fuel tanks, lubricating oil tanks or other flammable liquid tanks are to be of a type which does not require penetration below the top of the tank and their failure or over—tilling of the tanks will not permit release of contents in the tanks.

3.10.8.6 In cargo ships, sounding devices as prescribed in 3.10.8.5 may be used, and flat glasses may also be used provided that self-closing valves are fitted at the lower ends and at the top ends. The self-closing valve at the top end may be omitted if it is fitted above the maximum liquid level. The use of cylindrical gauge glasses is prohibited.

3.10.8.7 Where slotted pipes herring closed ends are employed, the closing plugs are to be of substantial construction.

3.10.8.8 The bottom plating under open ended sounding pipes is to be protected by striking plates of adequate thickness and size.

3.10.9 Short sounding pipes

3.10.9.1 Short sounding pipes may be used for tanks other than double bottom tanks without the additional closed level gauge provided an overflow system is fitted.

3.10.9.2 In machinery spaces and shaft tunnels where it is not practicable to extend the pipes as mentioned in 3.10.8.1, short sounding pipes extending to readily accessible positions above the platform may be fitted to double bottom tanks. When fuel oil pipes are ended up at machinery spaces, an oil gauge is to be additionally provided, in accordance with the requirements of3.10.8.5 or 3.10.8.6.

3.10.9.3 Short sounding pipes are to be easily accessible. Short sounding pipes to oil fuel and lubricating oil tanks are to be located in positions as far remote as possible from any heated surface or electrical equipment and, where necessary, effective shielding is to be provided in way of such surfaces and/or equipment.

3.10.9.4 Short sounding pipes are to be easily accessible. Short sounding pipes to oil fuel and lubricating oil tanks are to be fitted with cocks having plugs with permanently attached handles, so loaded that, on being released, they automatically close the cocks. Another small bore self-closing cock for examination is to be fitted below the above mentioned cock as well. Short sounding pipes to tanks other than oil tanks are to be fitted with shut-off cocks or with screw caps attached to the pipes by chains.

3.10.9. 5 In passenger ships, short sounding pipes are permissible only for sounding cofferdams and double bottom tanks situated in the machinery space, and are in all cases to be fitted with self-closing cocks as described in 3.10.9.4.

3 .10.10 Size of sounding pipes

3.10.10.1 Sounding pipes are to be not less than 32mm bore and those of heavy fuel oil tanks are not less than 50mm bore. Sounding pipes passing through or spaces where the temperatures contemplated are 0°C or below, are to be not less than 65 mm bore.

3.11 VENTILATION

3.11.1 General requirements

3.11.1.1 The ventilating ducts are not to be led through watertight bulkhead below the bulkhead deck.

3.11.1.2 Machinery spaces of category A are to be adequately ventilated so as to ensure that when machinery or boilers therein are operating at full power in all weather conditions including heavy weather, an adequate supply of air is maintained to the spaces for the safety and comfort of personnel and the operation of the machinery. Any other machinery space is to be adequately ventilated appropriate for the purpose of that machinery space.

3.11.1.3 All ventilator cowls for boiler rooms are to be fitted with devices so that they may be turned and locked in any desired direction.

3.11.1.4 Effective means of ventilation are to be provided for all lamp—rooms, paint lockers and other compartments used for the storage of inflammable substances, explosives or where toxic or inflammable gases may accumulate.

3.11.2 Ventilators

3.11.2.1 The ventilators are to comply with the relevant requirements in these regulations.

3.11.3 Ventilator cowls

3.11.3.1 Ventilator cowls are to be placed on the exposed deck and located as far remote from exhaust outlets, sky- lights and companionways as possible.

3.12 MEANS OF DETECTION OF WA TER INGRESS INTO CARGO HOLDS

3.12.1 Application

3.12.1.1 This part applies to bulk carriers of single side skin construction engaged on international voyages.

3.12.1.2 Bulk carriers of single side skin construction that are contracted for construction on or after 1 January 2003 are to comply by the time of delivery.

3.12.1.3 Bulk carriers of single side skin construction that are contracted for construction prior to 1 January 2003 are to comply:

a. For ships which will be 10 years of age or more on 1 July 2003, by the due date, after 1 July 2003, of the first intermediate survey or the first special survey, whichever occurs first;
b. For ships which will be less than 10 years of age on 1 July 2003, by the date on which the ship reaches 10 years of age.

3.12.2 Plans and documents

3.12.2.1 The arrangement of means of detection of water ingress into cargo holds is to be submitted to the Society for approval.

3.12.3 General requirements

3.12.3.1 Every ship described in 3.12.1.1 is to be provided with an approved permanent means of detecting the presence of water in the cargo holds of single side skin construction in excess of the small amounts which may be normally expected in the bilge wells. In general, the water ingress detectors are to actuate audible and visual alarms when water has reached the level 0.5 m above the inner bottom.

3.12.3.2 Water ingress detectors are also to be arranged to detect water when it reaches a level 2m above the inner bottom.

3.12.3.3 In floodable cargo holds, an interlocking device is to be installed in the water detection system.

3.12.4 Method of detection

3.12.4.1 The method of detection is to be by direct means. A direct means is one where the presence of water is detected by physical contact of` the water with the measuring device.
Examples of direct means are pressure sensitive tape and individual liquid actuated switches.

3.12.5 Alarms

3.12.5.1 The water ingress detectors are to actuate audible and visual alarms in the bridge and at the positions from which the drainage system is controlled when water has reached the preset detection level for the cargo hold when the alarm is actuated, the cargo hold affected should be identifiable on a control panel in the permanently manned space.

3.12.5.2 The audible and visual alarms of water ingress detectors are to meet the relevant requirements in these regulations.

3.12.6 Installation

3.12.6.1 A water ingress detector is to be fitted in the aft part of each cargo hold or in cargo conveyor tunnels, as appropriate.

3.12.6.2 Detectors, such as pressure sensitive tapes, are to be installed in tubes or similarly protected locations to protect them from mechanical damage and to isolate them from the cargo.

CHAPTER 4 MACHINERY PIPING SYSTEMS

4.1 GENERAL REQUIREMENTS

4.1.1 Application

4.1.1.1 Unless stated otherwise, the requirements of` this Chapter apply to machinery piping systems for ships of all types.

4.1.1.2 In addition to the requirements detailed in this Chapter, machinery piping systems are to comply with the relevant provisions contained in Chapter 2

4.2 OIL FUEL SYSTEMS

4.2.1 General requirements

4.2.1.1 Oil fuels for use in ships are to comply with the relevant provisions contained in 1.1.11.

4.2.1.2 Drip trays are to be provided under the oil tanks which do not form part of the hull structure, pumps, filters, boiler burners and all other oil fuel appliances which are required to be opened up frequently for cleaning or adjustment. Oils in the drip trays are to be drained to special sludge tanks and shut—off valves are to be fitted to the drain pipes where the sludge tanks are situated in double bottom tanks.

4.2.1.3 The gaskets used for joining covers and manholes of oil fuel tanks and for joining the flanges of fuel pipes are to be made of oil-proof or heat—resistant material.

4.2.1.4 For motor ships burning oil fuel which has to be purified by purifiers, two oil fuel purification units and heating units are to be provided, one of which is a standby.

4.2.1.5 The spaces in which the burning appliances of boilers and the oil fuel settling and service tanks are fitted are to be well ventilated and easy of access.

4.2.1.6 In addition to the local controls, the power supply to all independently driven oil fuel transfer pumps, boiler oil fuel pumps, diesel engine fuel pumps and oil separators is to be capable of being stopped from a readily accessible position outside the spaces in which they are situated.

4.2.1.7 The oil fuel systems of diesel engines for heavy oil are to be provided with immediate change—over devices for light diesel oil.

4.2.1.8 Two fuel oil service tanks or equivalent arrangements, for each type of fuel used on board necessary for propulsion and essential systems, are to be provided. For ships engaged in unrestricted service, each tank is to have a capacity for at least 8 h operation at sea, at maximum continuous rating of the propulsion plant and normal operating load of the generating plant associated with that tank. For ships of less than 500 gross tonnage engaged in restricted service, the capacity of each tank may be less than that of less than 8 h operation on a case-by-case basis, subject to agreement of the Society.
The arrangement of oil fuel service tanks is to be such that one tank can continue to supply oil fuel when the other is being cleaned or opened up for repair.

4.2.2 Boiler uptake arrangement

4.2.2.1 The uptakes of boilers, except those of exhaust boilers, a.re not to be in connection with diesel engine exhaust gas pipes.

4.2.2.2 Dampers or other closing appliances are not to be fitted to the inner funnels or to the uptakes of oil-fired boilers.

4.2.2.3 Where the exhaust gas is not allowed to pass through the exhaust boiler when there is no water in the boiler, an exhaust by—pass pipe with means indicating its open or closed condition is to be provided at the connection of the exhaust gas pipe to the boiler.

4.2.3 Oil burning units of boilers

4.2.3.1 Auxiliary boilers for essential services in this Chapter are those for the purpose of supplying steam to machineries as to ensure safe navigation of ships.

4.2.3.2 Main boilers and auxiliary boilers for essential services or for heating of heavy fuel oil and cargo oil are to have not less than two oil burning units, each unit comprising a pressure pump, a suction filter, a discharge filter and a heater. The capacities and arrangements of the units are to be such that all the steam required for essential services can be maintained with any one unit out of action. Where an exhaust gas boiler is capable of supplying steam for essential purposes, a single oil burning unit may be accepted. For a composite boiler, a single oil hunting unit may also be accepted.

4.2.3.3 Oil unit pressure pumps are to be entirely separate from the feed, bilge or ballast systems.

4.2.3.4 ln systems where oil is fed to the burners by gravity, duplex filters are to be fitted in the supply pipeline to the burners.

4.2.3.5 A starting-up oil fuel unit, which does not require power from shore, is to be provided for main boilers.

4.2.3.6 Where boiler burners are provided with steam purging and/or atomizing connections, the arrangements are to be such that oil fuel cannot find its way into the steam system.

4.2.3.7 The burner arrangements are to be such that a burner cannot be withdrawn unless the oil fuel supply to that burner is shut out.

4.2.3.8 A quick-closing master valve is to be fitted to the oil supply to each boiler manifold, suitably located so that the valve can be readily operated in an emergency, either directly or by means of remote control. ln the case of oil-fired boilers of automatic controls.

4.2.3.9 ln the case of top-fired boilers, means are to be provided so that, in the event of flame failure, the oil fuel supply to the burners is shut off automatically, and audible and visual warnings are given. For small auxiliary top-fired boilers, this requirement may be dispensed with, subject to agreement of the Society.

4.2.3.10 Provision is to be made, by suitable non—return arragements, to prevent oil from spill systems being returned to the burners when the oil supply to these burners has been shut off.

4.2.3.11 For alternately fired furnaces of boilers using exhaust gases and oil fuel, the exhaust gas inlet pipe is to be provided with an isolating device and interlocking arrangements whereby oil fuel can only be supplied to the burners when the isolating device is closed to the boiler.

4.2.4 Oil fuel pumps and filters

4.2.4.1 Where an oil fuel booster pump is fitted, one main supply pump of sufficient capacity is to be provided for the main engine at its maximum continuous output and one standby pump of sufficient capacity is to be provided for normal navigation of the ship. Such a standby pump is to be independently power driven and capable of being ready for immediate use. Where two or more main engines are fitted, each with its own booster pump, only one standby pump connected ready for immediate use is needed, or alternatively, a complete spare pump may be accepted, provided that it is readily accessible and can easily be installed.

4.2.4.2 Where pumps are provided for fuel valve cooling, the arrangements of standby ones are to be in accordance with 4.2.4.1.

4.2.4.3 Oil fuel filters are to be fitted in the oil fuel supply lines to the diesel engines and their arrangement are to be such that any filter can be cleaned without interrupting the supply of filtered oil fuel to the engines.

4.2.4.4 Oil filters fitted in parallel for the purpose of enabling cleaning without distributing oil supply to engines (e. g. duplex filters) are to be provided with arrangements that will the possibility of a filter under pressure being opened by mistake. Filters/ filter chambers are to be provided with suitable means for:

- Venting when put into operation;
- Depressurizing before being opened.

Valves or cocks with drain pipes led to a safe location are to be used for this purpose.

4.2.4.5 Where a power driven pump is necessary for transferring oil fuel, a standby pump is to be provided. Any suitable pump in connection with fuel transfer system may be accepted as the standby pump.

4.2.4.6 All pumps which are capable of developing a pressure exceeding the design pressure of the system are to be provided with relief valves. Each relief valve is to be so arranged as to discharge back to the suction side of the pump, and to effectively limit the pump discharge pressure to the design pressure of the system.

4.2.4.7 Valves or cocks are to be interposed between the pumps and the suction and discharge pipes, in order that any pump may be shut oil for opening up and overhauling.

4.2.5 Oil fuel piping

4.2.5.1 Oil fuel piping is to be entirely separate from other piping systems. The arrangements are to be such that oil cannot be admitted into tanks which are not structurally suitable for the carriage of oil or into tanks which are used for the carriage of fresh water. Where it is necessary to connect the fuel pipes to ballast systems, they are to be fitted with blanking flanges or other effective isolating devices.

4.2.5.2 Every oil fuel suction pipe from a double bottom tank is to be fitted with a valve or cock.

4.2.5.3 All valves and cocks forming part of the oil fuel installation are to be capable of being controlled from readily accessible positions above the working platform.

4.2.5.4 Oil fuel pressure pipes are to be led, wherever practicable, remote from heated surfaces and electrical appliances.
Where this is impracticable, the pipes are to be led in well lighted and readily visible positions and any detachable pipe connections are to be at a safe distance from them or effectively shielded with suitable drainage arrangements.

4.2.5.5 Pipes conveying heated oil to boilers under pressure are to be of seamless steel or other approved material having flanged or welded joints, and are to be placed in sight above the platform in well lighted parts. The number of flanged joints is to be kept to a minimum. The flanges are to be machined. The jointing material is to be oil proof and impervious to oil heated to 150°C , and is to be as thin as possible. The scantlings of the pipes and their flanges are to be suitable for a pressure of at least 1.37 MPa.

4.2.5.6 The short joining lengths of pipes to the burners from the control valves at the boiler may have threaded cone unions of robust construction.

4.2.5.7 Flexible hoses of approved material and design may be used for the burner pipes, provided that spare lengths, complete with couplings, are carried on board. For requirements relating to flexible hoses, see 2.4.4.2 to 2.4.4.7.

4.2.5.8 Oil fuel pipes and their valves and fittings are to be of steel or other approved material. Nodular graphite cast iron may be used for valves under static head fitted on the outside of fuel tank walls. Grey cast iron valves may be used in oil fuel piping with design pressure of less than 0.7 MPa and design temperature of less than 60°C. Restricted use of flexible pipes is permissible in positions where the Society is satisfied that they are necessary. Such flexible pipes and end attachments are to be of approved fire-resisting materials of adequate strength and are to be constructed to the satisfaction of the Society. Fire testing of flexible pipes is to be carried out as follows:

a. Flexible pipes with end attachments are to be subject to a fire for 30 min at a temperature of 800°C, while water at the maximum service pressure is circulated inside the pipe. The

temperature of the water at the outlet is to be not less than 80 °C. No leak is to be recorded during or after the test; or

b. while fire testing as (1) above, the pressure of flowing water in the flexible pipe is to be not less than 0.5 MPa and subsequent pressure test to twice the design pressure is to be carried.

4.2.6 Oil fuel arrangements and oil fuel tanks

4.2.6.1 As far as practicable, parts of the oil fuel system containing heated oil under pressure exceeding 0.18 MPa are not to be placed in a concealed position so that defects and leakage cannot readily be observed. The machinery spaces in way of such parts of the oil fuel system are to be adequately illuminated.

4.2.6.2 Every oil fuel pipe, which, if damaged, would allow oil to escape from a storage, settling or daily service tank situated above the double bottom are to be fitted with a cock or valve directly on the tank or short pipe with a length not exceeding the value obtained from the following formula. Such valves or cocks are to be capable of being closed locally as well as cable of being closed from safe and easily accessible positions outside the spaces where these tanks are situated. In the case of tanks having a capacity of less than 0.5 m^3, remotely controlled closing devices may be omitted except for the valves or cocks on daily service tanks. Where such added valves are fitted in machinery spaces, they are to be controlled outside the spaces.

$$L = 0.8D + 80 \quad \text{mm}$$

Where:
L - Length of short pipe, in mm;
D- outside diameter of steel pipe, in mm.

Remote shut—off control of oil fuel valves for emergency generating set and emergency fire pump is tc be separated from those of other valves.
In the special case of deep tanks situated in any shaft or pipe tunnel or similar space, valves on the tank are to be fitted but control in the event of fire may be effected by means of an additional valve on the pipe or pipes outside the tunnel or similar space. If such additional valve is fitted in the machinery space it is to be operated from a position outside this space.

4.2.6.3 Where the filling pipes to deep oil tanks are not connected to the tanks near the top, they are to be provided with non-return valves at the tanks or with valves or cocks fitted and controlled as in 4.2.6.2.
4.2.6.4 Oil fuel tanks are not to be situated immediately above boilers or other highly heated surfaces. Precautions are to be taken to prevent any oil that may escape under pressure from any pump, filter or heater from coming into contact with heated surfaces.

4.2.6.5 As far as practicable, oil fuel tanks are to be part of the ship's structure and are to be located outside machinery spaces of category A. Where oil fuel tanks, other than double bottom tanks, are necessarily located adjacent to or within machinery spaces of category A, at least one of their vertical sides is to be contiguous to the machinery space boundaries, and is to preferably have a common boundary with the double bottom tanks, and the area of the tank boundary common with the machinery spaces are to be kept to a Where such tanks are situated within the boundaries of machinery spaces of category A they are not to contain oil fuel having a flashpoint of less than 60°C (closed cup test). In general the use of free-standing oil fuel tanks is to be avoided. When such tanks are employed the use are to be prohibited in category A machinery spaces on passenger ships. Where permitted, they are to be placed in an oil-tight spill tray of ample size having a suitable drain pipe leading to a suitably sized spill oil tank.

4.2.6.6 Settling tanks are to be provided with means for draining water from the bottom of the tanks. If settling tanks are not provided, the oil fuel bunkers or daily service tanks are to be fitted with water drains.

4.2.6.7 Drain valves or cocks fitted to the oil fuel tanks are to be of self-closing type, and suitable provision is to be made for collecting the oily discharge.

4.2.6.8 In ships of 400 gross tonnage and above, oil is not to be carried in a forepeak tank or a tank forward of the collision bulkhead. All ships of less than 400 gross tonnages are to comply with the above mentioned provisions so far as it is reasonable and practicable.

4.2.7 Filling piping

4.2.7.1 Fuel filling is to be effected by means of permanently installed lines. The filling pipes are to be led to a level as low as practicable inside the tank.

4.2.7.2 Where filling stations are fitted on board, they are to be isolated from other spaces and are to be efficiently drained and ventilated. Filling stations are to be so arranged that filling can be performed safely from both sides of the ship.

4.2.7. 3 Provision is to be made against over-pressure in the filling pipelines, and any relief valve fitted for this purpose is to discharge to an overflow tank or other safe position.

4.2.8 Oil fired galleys

4.2.8.1 The oil fuel tank is to be located outside the galley and is to be fitted with approved means of filling and venting.

4.2.8.2 The fuel supply to the burners is to be capable of controlled from a readily accessible position outside the galley in the event of a fire occurring in the gallery.

4.2.8.3 For galleys where oil or flammable gas is in use, their structure and arrangement are to comply with the following requirements:

a. Naked fire is not in use for ignition of oil or gases, except for galley stoves or water heaters. Galleys are to be provided with ventilation appliances of sufficient capacity so as to purge the smoke and the gas liable to escape to a safe place. The structure and arrangement of oil—fired or gas stoves are to be subject to agreement of the Society. All pipes and fitting for delivering oil or gas from containers to the stoves or water heaters are to be of steel or other approved materials. And safety for appliances automatic shut-off are to be provided so that they will automatically shut 0E when the flame in the stoves goes out.
b. Naked fire is not to be in use for warming oneself. Galley stoves and similar appliances are to be firmly fixed. Sufficient fire protection and insulation layers are to be provided under, around and over. The possibility of block up by combustion remains is to be kept to a minimum and cleaning tools are to be provided. Where the damp for limitation of the exhaust in the uptake is in a closed position, sufficient flow area is to be kept. The ventilator in way of the stove space is to be of sufficient cross-sectional area so as to supply with enough air for full combustion of the stoves.

4.2.9 Oil fuel (lubricating oil) heating

4.2.9.1 The heating steam used for oil fuel (lubricating oil) tanks, heaters or oil separators is to be of saturated steam having a pressure not exceeding 0.68 MPa, and the oil fuel (lubricating oil) is not to be heated to a temperature exceeding 10°C below its flash point.

4.2.9.2 The exhaust drains from steam or hot water pipes used for heating the oil fuel (lubricating oil) are to be led to a separate observation tank in a well lighted and accessible position where it can be readily seen whether or not it is free from oil.

4.2.9.3 Relief valves are to be fitted on the oil side of heaters and are to be adjusted to operate at a pressure of 0.34 MPa above that of the supply pump relief valve or above the maximum outlet pressure of this supply pun1p. The discharge from the relief valves is to be led to a safe position.

4.2.9.4 The oil fuel pipes and oil transfer pipes intended for conveying heated oil fuel are to be provided with suitable heating means if necessary.

4.2.9.5 Oil fuel (lubricating oil) tanks in which oil is heated and heaters are to be provided with suitable means for the temperature of the oil.

4.2.9.6 Where steam heaters or heaters using other heating media are provided in fuel or lubricating oil systems, they are to be fitted with at least a high temperature alarm or low flow alarm in addition to a

temperature control, except, where the temperature dangerous for the ignition of the medium cannot be reached.

4.2.9.7 Electric heating of fuel oil or lubricating oil are to be avoided as far as practicable. When electric heaters are fitted, means are to be provided to ensure that heating elements are permanently submerged during operation. In order to avoid in any case element surface temperature of 220‘C and above, a safety temperature switch, independent from the automatic control sensor, is to be provided. The safety switch is to cut off the electrical power supply in the event of excessive temperature, and is to be provided with manual reset.

4.2.9.8 The exhaust gas of diesel engines is not to be directly used for heating oil fuel.

4.2.10 Alternative carriage of oil fuel and water ballast

4.2.10.1 In general, in oil tankers of 150 gross tonnage and above, and passenger ships engaged on international voyages and other ships of 4,000 gross tonnage and above, no ballast water is to be carried in oil fuel tanks. Where it is necessary to carry ballast water in oil fuel tanks, suitable means are to be provided for preventing pollution of the sea by oily—water ballast.

4.2.10.2 Where it is intended to carry oil fuel and water ballast in the same compartments alternatively, each settling or service tank fitted is to have a capacity sufficient to permit 12 h normal service, otherwise the suction lines of time compartments are to be so arranged that the oil may be pumped from any one compartment by the oil fuel pump at the same time as the ballast pump is being used on any other compartment.

4.2.11 Deep tanks for the alterative carriage of oil, water ballast or dry cargo

4.2.11.1 In the case of deep tanks which can be used for the carriage of oil fuel, cargo oil, water ballast or dry cargo, blank flange or other positive means of closing is to be provided for isolating the oil and water ballast filling and suction pipes, also the steam heating coils if retained in place, when the deep tank is used for dry cargo, and for isolating the bilge suction pipes when the deep tanks are used for oil or water ballast.

4.2.11.2 If the deep tanks are connected to an overflow system, the arrangements are to be such that liquid or vapour from other tanks cannot enter the deep tanks when dry cargo is carried in them.

4.2.12 Separation of cargo oils from oil fuel

4.2.12.1 Pipes conveying vegetable oils or similar cargo oils are not to be led through oil fuel tanks, nor are oil fuel pipes to be led through tanks containing these cargo oils.

4.2.13 Arrangements for other flammable oils

4.2.13.1 The arrangements for the storage, distribution and utilization of other flammable oils employed under pressure in power transmission systems, control and activating systems and heating systems are to be such as to ensure the safety of the ship-and persons on board. In locations where means of ignition are present, such are at least to comply with the provisions of 4.2.5.8 and 4.2.6.4, and with the relevant provisions contained in 3.10.

4.3 STEAM PIPING SYSTEMS

4.3.1 Arrangement

4.3.1.1 ln general, swam pipes are not to be led through lamp rooms, paint lockers and cargo spaces, but where it is impracticable to avoid this arrangement, plans are to be submitted to the Society for consideration. The pipes in way of cargo spaces are to be well protected from mechanical damage and pipe joints are to be as few as practicable and preferably butt welded.

4.3.1.2 Where steam pipes subject to a working pressure exceeding 0.98 MPa are placed near to the oil fuel tank, the clearance space between the pipe and the external surface of the tank is in general to be at least 250 mm.

4.3.1.3 Steam pipes are to be arranged in visible and accessible positions in the machinery spaces. Steam pipes, except those used for preheating and sea chat blow—off services, are in general not to be led under the floor plates in machinery spaces.

4.3.1.4 Where two or more boilers are interconnected by steam pipe or pipes, a screw-down non-return valve is to be provided in the steam pipe of each boiler. Valves intended to drain condensate are to be fitted in the pipe length between these valves.

4.3.2 Condensate drainage

4.3.2.1 The slope of the pipes and the number and position of the drain valves or cocks are to be such that water can be efficiently drained from any portion of the steam piping system when the ship is in normal trim and is either upright or has a list of up to 5°. Arrangements are to be made for ready access to the drain valves or cooks.
A by-pass line is to be provided where the condensate trap is installed.

4.3.3 Reduced pressure lines

4.3.3.1 Pipelines which are situated on the low pressure side of reducing valves are to be fitted with pressure gauges and with relief valves having sufficient discharge capacity. A by-pass line is to be

provided for pipelines which are to be fitted with reducing valves or a parallel spare reducing valve is to be additionally fitted.

4.3.4 Thermal expansion stresses

4.3.4.1 For steam pipes subject to at working temperature exceeding 350°C, special consideration is to be given to stress due to thermal expansion and to technique of installation.

4.4 FEED, BLOW-OFF AND CONDENSATE SYSTEMS

4.4.1 Feed pumps

4.4.1.1 Two or more power driven feed pumps are to be provided for main and auxiliary boilers for essential services or steam auxiliary boilers for heating heavy oil and cargo oil. These feed pumps are to be of sufficient capacity to supply the boilers under full load conditions with any one pump out of action.

4.4.1.2 Forced circulation boilers are to be provided with two independently driven circulating pumps, one of which is used as a stand—by pump.
For auxiliary forced circulation boilers not used for essential services, one circulating pump will be accepted.

4.4.1.3 Where a harbour feed pump is provided, it may be used for other purposes, but in no case is it to be used for oil transferring or for discharging oily bilges. Furthermore, a suitable arrangement is to be provided to prevent the contamination of feed from sea water.

4.4.2 Feed piping

4.4.2.1 Two feed water system are to be provided for main and auxiliary boilers for essential services steam auxiliary boilers for heating heavy oil and cargo oil. The feed systems are to be of sufficient capacity to supply feed water to the boilers with any one system out of action.
Feed water systems are to be so arranged that the feed water cannot be contaminated by oil or oily water.

4.4.2.2 Valves or cocks are to be interposed between the pumps and the suction and discharge pipes, so that any pump may be shut 0E and opened up for overhaul.

4.4.3 Reserve feed water

4.4.3.1 All ships fitted with main boilers and auxiliary boilers for essential services are to be provided with tanks of sufficient capacity for reserve feed water.

4.4.3.2 For main boilers in ships, one or more evaporators of adequate capacity are to be provided to cover the losses of feed water in the system. ln the case of auxiliary boilers for essential services in ships, evaporators are to be installed as necessary.

4.4.4 Condensate pumps

4.4.4.1 At least two power driven condensate pumps, one of which is a standby pump, are to be provided for dealing with the condensate from the main and auxiliary condensers. Independent feed pumps may be accepted as stand—by condensate pumps.

4.4.5 Blow-off piping

4.4.5.1 The internal diameter of the blow-0E pipes is to comply with the requirements of 6.5.7.2. Valves or cocks in the blow—off piping, situated at the ship's bottom or ship's sides, are to be arranged and constructed according to the provisions contained in 3.1.4.2 and 3.1.4.3.

4.4.5.2 The blow-off pipes of two or more boilers may be connected to a common discharge, but the blow—off pipe for each boiler is to be fitted with a non-return valve. It is recommended that a throttle washer be lined to the blow-off pipe.

4.5 COOLING WATER SYSTEMS

4.5.1 Cooling water pumps

4.5.1.1 For motor ships, where only one rna.in engine is fitted, a main cooling pump of sufficient capacity to maintain supply of water at the maximum continuous output of the machinery and a standby pump of sufficient capacity to supply cooling water under the normal navigating condition are to be provided. The standby pump is to be of independently power-driven type and to be connected ready for use. Where more than one main engine are fitted, each with its own cooling water pump, a complete spare pump may be accepted as a standby cooling water pump.

4.5.1.2 In steam ships, in addition to the main circulating pump for the condenser, there is to be an alternative supply from an emergency pump having a capacity sufficient to maintain the proper control of the ship (in general not to be less than 30% of that of the main circulating pump). If the main circulating pump unit consists of two independently power-driven pumps of approximately equal capacity, the emergency pump may be dispensed with.
Where a sea inlet scoop is fitted in lieu of the main circulating water pump, in addition to one independently power-driven circulating water pump having a capacity of at least 30% of that of the maximum required by circulation, a connection to the largest available pump suitable for circulation duties is to be fitted to provide the second means of circulation when the ship is maneuvering.

4.5.1.3 Where each essential auxiliary engine is fitted with a built-in cooling water pump, the standby pump may be dispensed with. lf two or more auxiliary engines are supplied with cooling water from a common system, a standby water pump is needed. The standby water pump may be substituted by other pumps of sufficient capacity.

4.5.1.4 Where fresh water cooling is employed for main and/or engines, a standby fresh water pump need not be fitted if there are suitable emergency connections from a salt water system.

4.5.2 Piping and fitting

4.5.2.1 The cooling water piping for diesel engines is to be capable of effectively regulating the inlet cooling water temperature. For closed circuit fresh water cooling system, expansion tanks are to be provided and it is recommended that an alarm for high temperature be fitted.

4.5.2.2 Where cooling water pumps can develop a pressure head greater than the design pressure of the system, they are to be provided with relief valves on the pump discharge. When discharge from the relief valves is to find its way into the bilge, the valves are to be fitted in readily visible positions above the floor. The arrangement is to be such that any from the relief valves will also be readily visible.

4.5.2.3 Not less than two sea inlets, which are to be fitted on both sides of the ship as far as practicable, are to be provided for the water pumps of sea water system or circulating system. The suction of any cooling water pump or circulating pump under normal service conditions is to be supplied from either one of the sea inlets.

4.5.2.4 Provision is to be made for the protection of all equipment cooled by sea water against corrosion.

4.5.2.5 Strainers are to be provided to the suction pipes between the sea inlets and the suctions of sea water pumps. The strainers are to be so arranged that they can be cleaned without interrupting the cooling water supply.

4.5.2.6 When it is necessary, the main diesel engine with closed circuit fresh water cooling system is to be provided with suitable means for warming the engine before starting. Alternatively, means to inter-connect the fresh water cooling system for main engine to that for auxiliary engines are acceptable.

4.6 LUBRICATING OIL SY SYSTEM

4.6.1 Lubricating oil pimps

4.6.1.1 Main engines are to be provided with a main lubricating oil pump of sufficient capacity to maintain supply of lubricating oil at the maximum continuous output of the machinery and a standby

pump of sufficient capacity to supply lubricating oil under normal navigating condition are to be provided. The standby pump is to be of independently power-driven type and to be connected ready for use.
For ships fitted with more than one main engine, only one independently power-driven standby pump fitted is acceptable. Where each main engine is fitted with a built-in lubricating oil pump, a complete spare pump available for installation and connection may be accepted as an independently power-driven standby pump.

4.6.1.2 Where each essential auxiliary engine is fitted with a built-in lubricating oil pump, the standby pump may be dispensed with. If two or more auxiliary engines are connected tc a common lubricating oil system, a standby pump is needed.

4.6.2 Piping and fitting

4.6.2.1 The lubricating oil piping is to be entirely separate from other piping systems. A common lubricating oil system is not to be in use for diesel engines and gear boxes.

4.6.2.2 Provision is to be made for the efficient filtration of the lubricating oil. The filters are to be capable of being cleaned without stopping the engine or interrupting normal supply of filtered oil to the engine. Pressure gauges are to be fitted on both ends of lubricating oil filters or strainers. Proposals for fitting an emergency automatic by-pass device in high speed engines are to be submitted to the Society for special consideration.
Magnetic strainers are to be provided for high-powered main turbines and their reduction gears.

4.6.2.3 A relief valve is to be fitted on the lubricating oil pump discharge if the pump is capable of developing a pressure exceeding the design pressure of the system. The relief valve is to be such that the discharge oil can find its way to the suction of the pump and the pump discharge pressure is to be effectively limited to the design pressure of the system.

4.6.2.4 Visual and audible alarms are to be provided to give warning of an appreciable reduction in pressure of the lubricating oil.

4.6.2.5 Where two or more diesel engines are fitted, the drain pipes leading from the engine sumps to the lubricating oil drain tanks are to be independent to avoid intercommunication between crankcases.
4.6.2.6 Ships classed for unrestricted services are to be provided with lubricating oil separators. If necessary, ships for restricted services are also to be provided with such separators.

4.6.3 Additional requirements for lubricating oil system of main turbines and main turbo-generators

4.6.3.1 For main turbines and main turbo-generators in electrically propelled ships, a suitable emergency supply of lubricating oil is to be arranged. For this purpose, either one of the following will be accepted:

a. The emergency supply may be obtained from a gravity tank holding sufficient lubricating oil to maintain adequate lubrication for not less than 5 min for main turbines, and, in the case of main turbo-generators, until the unloaded turbine comes to rest from the maximum rated running speed. The gravity tank is to be arranged to come automatically into use in the event of a failure of the lubricating oil pump. An alarm device is to be fitted to the gravity tank to give visual and audible warning when the oil in the tank falls to a predetermined level.
b. The emergency supply may be obtained from a standby pump or an emergency pump. These pumps are to be so arranged that their availability is not affected by a failure in the main power supply and that they are capable of coming automatically into use.

4.6.3.2 Overflow pipes, which are to be led to the lubricating oil drain tanks, are to be fitted to the gravity tanks and the cross-sectional area of the overflow pipes is not to be less than 1. 25 times that of the filling pipes from the lubricating oil pumps. The overflow pipes are to be fitted with illuminated sight glasses.

4.6.4 Lubricating oil arrangements and lubricating oil tanks

4.6.4.1 The separation of lubricating oil tanks from adjacent tanks is to be in compliance with the requirements of 2.1.6.3.

4.6.4.2 The capacity of lubricating oil drain tanks is to be sufficient to hold the oil in the whole system.
Where an engine lubricating oil drain tank extends to the bottom shell plating in ships that are required to be provided with a double bottom, a shut—off valve is to be fitted in the drain pipe between the engine casing and the double bottom tank. This valve is to be capable of being closed from an accessible position above the level of the lower platform. If the drain tanks in the double bottom are separated from the shell plating by cofferdams, the shut-off valve mentioned above may be dispensed with.
The oil inlet pipe of the drain tank is to be extended to an adequate depth below the lowest working level and is to be located as wide apart from the outlet as practicable.

4.6.4.3 The pressure lubrication systems are to comply with the requirements of 4.2.5.8, 4.2.6.1, 4.2.6.2 and 4.2.6.4 and the relevant provisions contained in these regulations.
In the case of tanks having a capacity of less than 0.5 m^3, consideration will be given to the omission of remote controls.
On basis of individual consideration that an unauthorized operation of the remotely controlled closing valves on the lubricating tanks will safe running of the main or eventful engines, the requirement for remotely controlled device may be relaxed.

4.6.4.4 All ships are to be provided with lubricating oil storage tank(s) having an adequate capacity.

4.6.4.5 Lubricating oil tanks are to be provided with heating devices complying with the requirements of 4.2.9.1 to 4.2.9.3 and 4.2.9.5 to 4.2.9.6 or 4.2.9.7 as necessary.

4.6.4.6 Level indicators in accordance with the requirements detailed in 3.10.8 are to be fitted to all lubricating oil tanks.

4.7 HYDRAULIC TRANSMISSION PIPING SYSTEMS

4.7.1 Materials

4.7.1.1 All components in the hydraulic transmission piping systems are to be made of materials which are not corrodible and have no chemical reaction with the hydraulic fluid.

4.7.1.2 The hydraulic fluid is to be of high chemical stability and of good viscosity-temperature property.

4.7.2 Piping

4.7.2.1 The hydraulic transmission piping is not to be used for the lubrication of other equipment.

4.7.2.2 The strength of hydraulic pipes and fitting is to be sufficient to withstand the pressure fluctuations which might occur in the system.

4.7.2.3 Strainers and relief valves are to be provided in the hydraulic transmission piping systems. The discharge from the relief valves is in general to be led to the hydraulic fluid tanks.

4.7.2.4 Provision is to be made for de-aeration in the hydraulic piping systems and the hydraulic fluid cylinders, etc. The hydraulic piping is to be so arranged as to avoid the formation of air pockets.

4.7.2.5 Where hydraulic accumulators are provided in the hydraulic systems, safety valves are to be fitted on the liquid side. For hydro-pneumatic accumulators, safety valves or fuse plugs are to be fitted on the gas side, otherwise they are to be fitted in the pipe line.

4.7.2.6 The rubber flexible hoses are to be so arranged that abrupt bends and twisting will not occur in the laying of the hoses and they are to be far away from vibration and hot sources.

4.7.2.7 Hydraulic remote control valves for essential service are to be capable of being operated with a hand pump in emergency condition, and indicators showing whether the valves are open or closed are to be provided at their operating positions.

4.7.2.8 The hydraulic transmission piping system for essential services is to be provided with a standby power pump which is to be capable of immediate use.

4.7.3 Arrangement

4.7.3.1 Hydraulic units with working pressure above 1.5 MPa are to be preferably be placed in separate spaces. If it is impracticable to locate such units in a separate space, adequate shielding is to be provided.

4.8 THERMAL OIL SYSTEM

4.8.1 General requirements

4.8.1.1 The thermal oil used in the thermal oil system is to be compatible with the oil being heated.

4.8.1.2 Heating of liquid cargoes with flash points below 60°C is to be arranged by means of a separate secondary system, located completely within the cargo area. However, a single circuit system may be accepted on the following conditions:

a. System is so arranged that a positive pressure in the coil is to be at least 3 m water column above the static head of the cargo when circulating pump is not in operation.
b. The thermal oil system expansion tank is to be fitted with high and low level alarms.
c. Means are to be provided in the thermal oil system expansion tank for detection of flammable cargo vapours.
d. Valves for the individual heating coils are to be provided with locking arrangement to ensure that the coils are under static pressure at all times.

4.8.2 Plans and documents

4.8.2.1 The following plans and documents are to be submitted to the Society for approval:

a. Piping and pumping system;
b. General arrangement of thermal oil installation;
c. Thermal oil heaters and its main components;
d. Monitor and alarming system;
e. Parameters of thermal oil including viscosity, flash point, ignition point, temperature of decomposition, etc.;
f. Operation and maintenance instruction.

4.8.3 Design and manufacture

4.8.3.1 The installation is generally to comprise at least two circulation pumps and two filters for the thermal oil.

4.8.3.2 The inlet and outlet valves of oil-fired thermal oil heaters and exhaust—fired thermal oil heaters are to be controlled from outside the compartment where they are situated. As an alternative, an arrangement for quick gravity drainage of the thermal oil contained in the system into a collecting tank is acceptable.

4.8.3.3 Arrangements are to be provided to permit from inside and from outside the heater spaces a quick discharge by gravity of the expansion tank into a suitable tank.

4.8.3.4 Local controls are to be fitted for thermal oil heaters, and monitoring arrangements and alarms are to be provided as indicated in Table 4. 8.3.4:

Table 4.8.3.4

Monitoring and Alarms for thermal Oil Heaters

Items to be monitored	Local control			Remarks
	Indication	Alarm	Automatic shut-off	
(1) Oil-fired				
Thermal oil expansion tank level	X	Low	X	
Thermal oil flow or pressure	X	Low	X	
Thermal oil outlet temperature	X	High	X	
Combustion air pressure or forced ventilation		Low or shut-off	X	
Oil fuel pressure	X	Excessively low		Standby pumps to start automatically
Heavy oil fuel temperature or viscosity	X	Low or great		
Uptake temperature	X	High	X	
Burner flame or ignition		Flameout/failure	X	Each burner to be monitored
(2) Exhaust-fired				
Thermal oil expasion tank level	X	Low	X	
Thermal oil flow or pressure	X	Low	X	
Thermal oil outlet temperature	X	High	X	
Exhaust temperature	X	High		

Note: X= functional requirement

4.8.3.5 An approved automatic fire detection or fire alarm system is to be provided in each thermal oil heater spaces.

4.8.3.6 A suitable fire extinguishing system is to be provided for protecting the heater furnace. Such system is to be permanently connected to the furnace and can be activated from outside the heater space.

4.8.3.7 Tubes and pipes for thermal oil are to be seamless steel tubes or pipes or, if specially approved by the Society welded steel tubes and pipes.

4.8.3.8 Casings of pumps, valves and similar components are to be made of steel or equivalent ductile material.

4.8.3.9 Thermal oil piping is to have welded connections except that flanges may be used to the limited number necessary for inspection and maintenance. Flanges are to be of the recess type. Suitable devices are to be provided for avoiding splash of liquids in case of leakage in way of the flange. Screw joints are not to be used for thermal oil piping.

4.8.3.10 The piping system is to be designed and constructed to permit expansion and contraction without abnormal stressing.

4.8.3.11 Particular attention is to be paid to the insulation of the thermal oil piping and heater. Flanges are not permitted to be protected by the insulation material. Insulation material of thermal oil heater and piping is to be of an approved type and, as far as possible, it does not lower than the auto-ignition point of the thermal oil when impregnated by it.

4.8.3.12 The thermal oil system is also to comply with the relevant requirements contained in the Rules.

4.8.4 Arrangement

4.8.4.1 Thermal oil heaters are to be located in spaces separated from ma.in and auxiliary machinery spaces. These spaces are to be considered as machinery spaces of category A and to comply with the relevant requirements contained in these regulations.

4.8.4.2 The thermal oil circulating pumps are to be arranged for emergency stopping from a position outside the space where they are situated.

4.8.4.3 Drip trays are to be installed under the components of the installation where leakage is liable to occur. These drip trays are to be drained to an appropriate sludge tank.

4.8.4.4 The thermal oil system is to be fitted with an expansion tank of sufficient capacity. The thermal oil expansion tank and pumping plants are to be located in the same space as the thermal oil heaters.

4.8.4.5 Vents from expansion tanks and thermal oil storage tanks of the thermal oil heating plants are to be led to open deck.

4.8.4.6 Thermal oil piping and pumping system are to comply with the relevant requirements of 4.2.

4.8.4.7 Thermal oil pipes are not to pass through accommodation spaces nor control stations. Thermal oil piping passing through main and auxiliary machinery spaces is to be restricted as far as possible.

4.8.4.8 Thermal oil heater moms are to be suitably mechanically ventilated and illuminated.

4.8.5 Additional requirements for exhaust-tired thermal oil heaters

4.8.5.1 The heater is to be so designed and installed that all tribes may easily and readily be inspected for signs of corrosion and leakage.

4.8.5.2 The heater is to be fitted with temperature sensor(s) and an alarm for fire detection.

4.8.5.3 A fixed fire and system is to be fitted. A drenching system providing copious amounts of water may be accepted. The exhaust ducting below the exhaust boiler is to be arranged for adequate collection and drainage, to prevent water flowing into the diesel engine.

4.8.6 Testing

4.8.6.1 The system and installation are to be subjected to hydraulic and tightness tests to the relevant requirements contained in these regulations.

4.8.6.2 On completion, working tests of the thermal oil system are to be carried out in accordance with an approved programme.

4.9 REQUIREMENTS CONCERNING USE OF CRUDE OIL OR SLOPS AS FUEL FOR TANKER BOILERS

4.9.1 General requirements

4.9.1.1 In tankers crude oil or slops may be used as fuel for main or auxiliary boilers according to the following requirements. For this purpose all arrangement drawings of a crude oil installation with pipeline layout and safety equipment are to be submitted for approval in each case.

4.9.1.2 Crude oil or slops may be taken directly from cargo tanks or flow slop tanks or from other suitable tanks. These tanks are to be fitted in the cargo tank area and are to be separated from non-gas-dangerous areas by means of cofferdams with gas-tight bulkheads.

4.9.1.3 The construction and workmanship of the boilers and burners are to be proved to be satisfactory in operation with crude oil.
The whole surface of the boilers is to be gas-tight separated from the engine room. The boilers are to be tested for gas-tightness before being used. The whole system of pumps, strainers, separators and heaters, if any, is to be fitted in the cargo pump room or in another room, to be considered as dangerous, and separated from engine and boiler room by gas-tight bulkheads. When crude oil is heated by steam or hot water the outlet of the heating coils is to he led to a separate observation tank installed together with above mentioned components. This closed tank is to be fitted with a venting pipe led to the atmosphere in a safe position according to the provisions for tankers and with the outlet fitted with a suitable flameproof wire gauze of corrosion resistant material which is to be easily removable for cleaning.

4.9.1.4 Electric, internal combustion and steam (when the steam temperature is higher than 220 C) prime movers of driving pumps, of separators (if any) are to be fitted in the engine room or in another non-dangerous room.
Where drive shafts pass through pump room bulkhead or deck plating, gas-tight glands are to be fitted. The glands are to be efficiently lubricated from outside the pump room.

4.9.1.5 Pumps are to be fitted with a pressure relief by-pass from delivery to suction side and it is to be possible to stop them by a remote control placed in a position near the boiler fronts or machinery control room and from outside the engine room.

4.9.1.6 When it is necessary .to preheat crude oil or slops, their temperature is to be automatically controlled and a high temperature alarm is to be fitted.

4.9.2 Arrangement

4.9.2.1 The piping for crude oil or slops and the draining pipes for the tray defined in4.9.2.3 are to have a thickness as shown in Table 4.9.2.1.

Table 4.9.2.1
External diameter and thickness of draining pipes (mm)

External diameter d_e	Thickness $_t$
$d \leq 82.5$	≥ 6.3
$88.9 < d \leq 108$	≥ 7.1
$114.3 < d \leq 139.7$	≥ 8.0
$152.4 \leq d$	≥ 8.8

Their connections (to be reduced to a minimum) are to be of the heavy flange type. Within the engine room and boiler room these pipes are to be fitted within a metal duct, which is to be gas-tight and tightly connected to the fore bulkhead separating the pump room and to the tray. This duct (and the enclosed

piping) is to be fitted at a distance from the ships side of at least 1/5 of the vessel's beam (B) amidships and be at an inclination rising towards the boiler so that the oil naturally returns towards the pump room in the case of leakage or failure in delivery pressure. It is to be fitted with inspection openings with gas-tight doors in way of connections of pipes within it, with an automatic closing drain—trap placed on the pump room side, set in such a way as to discharge leakage of crude oil into the pump room.

In order to detect leakages, level position indicators with relevant alarms are to be fitted on the drainage tank defined in 4.9.2.3. Also a vent pipe is to be fitted at the highest part of the duct and is to be led to the open in a safe position. The outlet is to be fitted with a suitable flameproof wire gauze of corrosion-resistant material which is to be easily removable for cleaning.

The duct is to be permanently connected to an approved inert gas system in order to make possible:

- Injection of inert gas in the duct in case of tire or leakage;
- Purging of the duct before carrying out work on the piping in case of leakage.

4.9.2.2 In way of the bulkhead to which the duct defined in 4.9.2.1 is connected, delivery and return oil pipes are to be fitted on the pump room side, with shut-off valves remotely controlled from a position near the boiler fronts or from the machinery control room. The remote control valves are to be interlocked with the hood exhaust fans (defined in 4.9.3.1) to ensure that whenever crude oil is circulating the fans are running.

4.9.2.3 Boilers are to be fitted with a tray or gutter way of a height to the satisfaction of the Society and be placed in such a way as to collect any possible oil leakage from burners, valves and connections.

Such a tray or gutter way is to be fitted with a suitable flameproof wire gauze, made of corrosion resistant material and easily dismountable for cleaning. Delivery and return oil pipes are to pass through the tray or gutter way by means of a tight penetration and are then to be connected to the oil supply manifolds.

A quick closing master valve is to be fitted on the oil supply to each boiler manifold.

The tray or gutter way is to be fitted with a draining pipe discharging into a collecting tank in pump room. This tank is to be fitted with a venting pipe led to the open in a safe position and with the outlet fitted with wire gauze made of corrosion resistant material and easily dismountable for cleaning. The pipe is to be fitted with arrangements to prevent the return of gas to the boiler or engine room.

4.9.3 Other requirements

4.9.3.1 Boilers are to be fitted with suitable hood in such a way as to enclose as mach as possible of the burners, valves and oil pipes, without preventing on the other side, air inlet to burner register.

The hood, if necessary, is to be fitted with suitable doors placed in such a way as to enable inspection of and access to oil pipes and valves placed behind it. It is to be fitted with a duct leading to the open in a safe position, the outlet of which is to be fitted with a suitable flameproof wire gauze, easily dismountable for cleaning. At least two mechanically driven exhaust fans having spark proof impellers are to be fitted so that the pressure inside the hood is less than that in the boiler room. The exhaust fans are to be connected with automatic change over in case of stop page or failure of the one in operation.

The exhaust fan prime movers are to be placed outside the duct and a gas—tight bulkhead penetration is to be arranged for the shaft.
Electrical equipment installed in gas dangerous areas or in areas which may become dangerous (i. e. in the hood or duct in which crude—oil piping is placed) is to be of certified safe type as required by the Society.

4.9.3.2 When using fuel oil for delivery to and return from boilers fuel oil burning units in accordance with the Rules are to be fitted in the boiler room. Fuel oil delivery to, and returns from, burners are to be effected by means of a suitable mechanical interlocking device so that running on fuel oil automatically excludes running on crude oil or vice versa.

4.9.3.3 The boiler compartments are to be fitted with a mechanical ventilation plant and are to be designed in such a way as to avoid the formation of gas pockets.
Ventilation is to be particularly efficient in way of electrical plants and machinery and other plants which may generate sparks. These plants are to be separated from those for service of other compartments as by the Society.

4.9.3.4 A gas detector plant is to be fitted with intakes in the duct defined in 4.9.2.1, in the hood duct (downstream of the exhaust fans in way of the boilers) and in all zones where ventilation may be reduced. An optical warning device is to be installed near the boiler fronts and in the machinery control room. An acoustical alarm, audible in the machinery space and control room, is to be provided.

4.9.3.5 Means are to be provided for the boiler to be automatically purged before tiring.

4.9.3.6 Independent of the tire extinguishing plant as required in the Rules, an additional fire extinguishing plant is to be fitted in the engine and boiler rooms in such a way that it is possible for an approved fire extinguishing medium to be directed on to the boiler fronts and on to the tray defined in 4.9.2.3. The emission of extinguishing medium is automatically to stop the exhaust {an of the boiler hood.
4.9.3.7 A warning notice is to be fitted in an easily visible position near the boiler front. This notice is to specify that when an explosive mixture is signalled by the gas detector plant defined in 4.9.3.4 the watchkeepers are to immediately shut off the remote controlled valves on the crude oil delivery and return pipes in the pump room, stop the relative pumps, inject inert gas into the duct defined in 4.9.2.1 and tum the boilers to normal running on fuel oil.

4.9.3.8 One pilot burner in addition to the normal burning control is required.

4.10 EXHAUST PIPELINE

4.10.1 Arrangement

4.10.1.1 Uptakes of boilers except exhaust gas boilers are not to be connected with exhaust pipelines of diesel engines.

4.10.1.2 Uptake governors or other means for closing the uptakes are not to be fitted within uptakes or funnels of oil-fired boilers.

4.10.1.3 For oil-fired/ exhaust gas alternative boilers, their exhaust inlets are to be fitted with isolation devices and so arranged that oil fuel and exhaust gas will not be in use simultaneously.

4.10.2 Silencers

4.10.2.1 The structure of silencers is to be so designed that the internal cleaning and inspection can be carried out easily and these silencers are to be fitted with washing units with compressed air or steam or other cleaning appliances and drainage valves or cocks.

4.10.2.2 The external portion of silencers are to be packed with thermal insulation materials.

4.10.3 Water heaters

4.10.3.1 Water heaters fitted on the ducts for exhaust gas and smoke are, in general, to be of open type. The strength calculation of close type water heaters is to be in accordance with the relevant requirements in Chapter 6.

4.10.3.2 Close type water heaters are to be fitted with relief valves, pressure gauges, water level indicators, etc.

4.10.3.3 On construction, the close type water heaters are to be subject to a hydraulic test of 1.5 times the design pressure and the test pressure is not to be less than 0.4 MPa. The test of relief valves is to be carried out in accordance with the requirements in 6.5.5.3.

4.10.3.4 Open type water heaters are to be fitted with a vent pipe of sufficient diameter and the vent pipe is not to be fitted with any closing appliances.

CHARPTER 5 PIPING SYSTEM FOR OIL TANKERS

5.1 GENERAL REQUIREMENTS

5.1.1 Application

5.1.1.1 The requirements of this Chapter apply to oil tankers having the main propelling machinery aft which are intended to carry crude oil and petroleum products having a flash point not exceeding 60°C (closed cup test). Where ships are intended for the carriage of cargo oil having a flash point exceeding 60°C (closed cup test), the relevant requirements in 5.6 are to be complied with.

5.1.1.2 In addition to the requirements of this Chapter, piping systems for oil tankers are also to comply with the relevant provisions contained in Chapters 2, 3 and 4, where applicable.

5.1.2 Arrangements of dangerous spaces

5.1.2.1 Diesel engines, or any other equipment which could constitute a possible source of ignition, are not to be situated within cargo tanks, pump rooms, cofferdams or other spaces liable to contain cargo oil or explosive vapours, or in spaces or zones immediately adjacent to cargo oil or slop tanks. The temperature of steam, or other fluid, in pipes (or heating coils) in these spaces is not to exceed 22OC.

5.1.3 Steam connections to cargo tanks

5.1.3.1 Where steaming out connections are provided for cargo tanks or cargo pipelines, they are to be fitted with valves of the screw-down non-return type. The main supply to these connections is to be fitted with a master valve placed in a readily accessible position clear of the cargo tanks. The steaming pipes are to be so arranged that the steam can be supplied to the upper and lower parts of the tank separately as necessary.

5.1.4 Cargo pump room

5.1.4.1 Cargo pump rooms are to be situated within, or adjacent to, the cargo tank area and are to be provided with ready means of access on open deck. Pump rooms are to be totally independent of and to have no direct communication with machinery spaces.

5.1.4.2 In cargo pump rooms any drain pipes from steam or exhaust pipes or from the steam cylinders of the pumps are to terminate well above the level of the bilges.

5.1.5 Slop tanks

5.1.5.1 In oil tankers, the venting arrangement, level sounding devices, heating systems and the piping for conveying oily water and cargo oil for the slop tanks for collecting and treating tank washings and ballast

from cargo oil tanks and other oily water are to comply with the relevant requirements for cargo oil tanks.

5.1.5.2 Discharge of oily water from slop tanks is to comply with the provisions for the prevention of pollution from ships.

5.1.6 Cargo tank level sounding devices

5.1.6.1 Each cargo tank is to be fitted with suitable means for the liquid level in accordance with the following requirements:

a. In oil tankers fitted with a fixed inert gas system, the cargo tanks are to be fitted with closed sounding devices of an approved type, which do not permit the escape of cargo to the atmosphere when being used.
b. Sounding pipes or other approved devices, which may permit a limited amount of vapour to escape to atmosphere when used, would be accepted for those tanks which are not to be fitted with closed devices. The devices are to be so designed as to the sudden release of vapour or liquid under pressure and the possibility of liquid spillage on deck. Means are also to be provided for relieving tank pressure before the device is operated.

Arrangements which permit the escape of vapour to the atmosphere are not to be fitted in enclosed spaces.

5.1.6.2 Separate ullage openings may be fitted as are serve means for sounding cargo tanks.

5.1.7 Air and sounding pipes for cofferdams

5.1.7.1 Deep cofferdams at the force aft ends of the cargo spaces and other tanks or cofferdams within the range of the cargo tanks, which are not intended for cargo, are to be provided with air and sounding pipes led to the open deck. The air pipes are to be fitted with renewable wire gauze diaphragms at their outlets. The height of air pipes from the deck to the point where water may have access below is not to be less than 760 mm.

5.1.7.2 So far as practicable, the air and sounding pipes lequiredin5.1.7.1 are not to pass through cargo tanks. Were side ballast tank or empty side tank are not provided on ship, the air and pipes in way of the double bottom may pass through cargo tanks. But a wall thickness of the pipes passing though cargo tanks are to comply with the requirements in Table 5.3.4.2 and the pipes are to be completion or with welded joints.

5.1.8 Cargo oil heating system

5.1.8.1 The steam used for heating cargo oil is to be of saturated steam having a temperature not exceeding 220 °C.

5.1.8.2 An observation tank is to be provided for the heating coil drains and is to be located in swell ventilated and well illuminated part of the machinery space remote from the boilers, diesel engine exhaust pipes and electrical equipment. The upper drain pipe of the tank is to be led to a sludge tank.

5.1.8.3 The heating steam supply and return lines are not to penetrate the cargo tank plating, other than at the top of the tank, and these lines are to be run above the weather deck.

5.1.8.4 Insolated shut-off valves or cocks are to be provided at the inlet and outlet connections to the heating circuit(s) of each tank. The heating coil exhaust pipes of the cargo oil heating systems for each tank are to be fitied with inspection valves or cocks on the open deck to check the heating coils for leakage.

5.1.8.5 Spectacle flanges or spool pipes are to be provided in the heating steam supply and return pipes to the cargo heating system, at a suitable position within the cargo area, so that the lines can be blanked off in circumstances where the cargo does not require to be heated or where the heating coils have been removed from the tanks. Alternatively, blanking arrangements may be provided for each tank circuit.

5.1.9 Gas fleeing equipment

5.1.9.1 Provision is to be made for the gas freeing of cargo oil tanks when the cargo has been discharged, and for the ventilation and gas fleeing of all compartments adjacent to cargo oil tanks. For the purpose of monitoring flammable vapour, portable instruments are to be available on board for gas detection.

5.1.10 Earthing of cargo oil pipes

5.1.10.1 Earthing and bonding of cargo tanks and piping systems for the control of static electricity is to comply with the requirements in these regulations.

5.1.11 Free of spark

5.1.11.1 Diesel engine exhaust gas pipes are not to be led overboard through the shell plating. Furthermore, the exhaust gas pipes and the boiler uptakes are to be provided with effective arresters.

5.1.12 Deck spraying pipes

5.1.12.1 Deck spraying pipes are to be fitted on the open deck in the cargo oil tank areas as necessary.

5.2 CARGO HANDLING SYSTEM

5.2.1 General requirements

5.2.1.1 At least two independently power-driven cargo oil pumps are no be connected to the cargo oil system.

5.2.2 Cargo pumps

5.2.2.1 Cargo pumps for the purpose of filling or emptying the cargo oil tanks are to be used exclusively for this purpose, except that they may be used for crude oil washing, cargo pump room drainage (see 5.3.2.1) and filling or emptying water ballast in the cargo oil tanks. They are not to have any connections to compartments outside the range of cargo oil tanks.

5.2.2.2 Cargo pumps are to be installed in isolated pump rooms.

5.2.2.3 Where cargo pumps are driven by steam engines or turbines having a steam temperature not exceeding 22O°C, the prime movers may be installed in the pump room.

5.2.2.4 Where cargo pumps are driven by shafting which passes through a pump room bulkhead or deck, gastight glands are to be fitted to the shaft at the pump room plating. The glands are to be efficiently lubricated from outside pump room and are to be so designed as to prevent overheating. The seal parts of the glands are to be of materials that will not initiate sparks. Where a bellows piece is incorporated in the design, it is to be hydraulically tested to 0.34 MPa before fitting.

5.2.2.5 Cargo pumps installed in cargo pump moms and driven by shafts passing through pump room bulkheads are to be fitted with temperature sensing devices for bulkhead shaft glands and shaft bearings of cargo pumps from outside of pump morn. Alarm is to be initiated for excessive temperature of the above-mentioned glands and bearings.

5.2.2.6 All pumps which are capable of developing a pressure exceeding the design pressure of the system are to be provided with relief valves. Each relief valve is to be so arranged as to discharge back to the suction side of the pump, and to effectively limit the pump discharge pressure to the design pressure of the system.

5.2.2.7 Cargo oil pumps are to be capable of being stopped from a suitable position outside the pump room, as well as at the pumps.

5.2.2.8 A pressure gauge the discharge pressure is to be fitted at the delivery side of each cargo oil pump. An additional gauge is to be fitted in the vicinity of the pump control station.

5.2.3 Cargo piping system

5.2.3.1 Cargo oil pipes are to be laid only within the cargo tank area.

5.2.3.2 Where a ship is arranged for bow and/or stem loading and discharge of cargo outside the cargo tank area, the pipelines leading to such connections are be provided with spectacle flanges or removable spool pieces, where branched off from the main line, and a blank flange at the bow and/or stem end connections.
The spaces within 3 m of discharge manifolds are to be considered as dangerous spaces with regard to electrical or incentive equipment.

5.2.3.3 Where Cargo tanks and slop tanks are provided with direct filling connections, the loading pipes are to be led to as low a level as practicable inside the tanks, so as to minimize the generation of static electricity.

5.2.3.4 Where it is necessary to fill the oil tanks by using the cargo oil suction pipes, a by-pass is to be provided to connect the suction and discharge ends of cargo oil pump. A stop valve is to he fitted on the by-pass.

5.2.3.5 Where the cargo oil piping system is used also as a ballast system for the cargo oil tanks, two valves are to be fitted between the sea inlet and the cargo oil main, one of which is to be capable of being locked in its closed position. Discharge of oil water ballast is to comply with the provisions for the prevention of pollution from ships.

5.2.3.6 Terminal pipes, valves and other fittings in the cargo loading and discharging lines to which shore installation hoses are directly connected, are to be of steel or ductile material. They are to be of robust construction and strongly supported.
A manually operated shut-off valve is to be fitted to each shore loading/discharging connection.

5.2.3.7 Expansion joints or bends are to be provided, where necessary, in the cargo pipelines.

5.2.3.8 For cargo piping system, means are to be provided to enable the contents of the cargo lines and pumps to be drained to a cargo tank or slop tank or to the shore facilities.

5.2.3.9 The operating rods for cargo valves in cargo oil tanks are to be extended to positions above the open deck. In the case of cargo tanks which are located adjacent to below-deck pump rooms or pipe tunnels, the operating rods may be located in these spaces at the bulkhead.
Stuffing boxes are to be fitted where the operating rod passes through the deck or bulkhead and to be so constructed that packing may be renewed from outside the cargo tanks. Indicators are to be provided at the operating hand wheels to show whether the valves are open or closed.

5.2.3.10 Materials used for the friction parts of the valves and operating rods of the cargo oil piping and of flexible couplings in shafts between the cargo pumps and the prime movers are to such as to preclude the possibility of sparking while in operation.

5.2.3.11 Cargo oil pipelines are not to pass through ballast tanks. Where this can not be avoided, the pipes passing through ballast tanks are to have a wall thickness in accordance with the requirements in Table 5.3.4.2 and are to be provided with welded joints.

5.2.4 Remote control valves

5.2.4.1 Valves on deck and in pump rooms which are provided with remote control are to have local manual operating devices independent of the remote operating mechanism or emergency means for operating the valve actuators in the event of damage to the main hydraulic circuits on deck, such as connections, with isolating valves, fitted to the pipes near the valve actuators as far as possible for coupling to a standby portable pump carried on board.

5.2.4.2 Where the valves and their actuators are located inside the cargo tanks, two separate auctions are to be provided in each tank, or alternative means of emptying the tanks in the event of a defective actuator, are to be provided.
It is recommended that the lines to the valve actuators be led vertically inside the tanks from deck, and that connections, with isolating valves, be provided on deck lines for coupling to a standby portable pump carried on board for emergency operation of the valves in the event of damage to the main hydraulic circuits on deck.

5.2.4.3 Indication is to be provided at the remote control stations showing whether the valve is open or shut.

5.2.4.4 All actuators are to be of a type which will prevent the valves from opening inadvertently in the event of the loss of pressure in the operating medium. The design of the actuators is to be such that contamination of the operating medium with cargo oil cannot take place under normal operating conditions.

5.2.4.5 Compressed air is not to be used for operating actuators inside cargo tanks.

5.2.4.6 For the actuators in cargo tank, the supply tank is to be located as high as practicable above the level of the top of cargo tank, and all actuator supply lines are to enter the cargo tanks through the highest part of the tanks. Furthermore, the supply tank is to be of the closed type with an air pipe led to a safe space on the deck and fitted with a flameproof wire gauze diaphragm at its open end. This tank is also to be fitted with a high and low level audible and visual alarm.

5.3 PIPING SYSTEMS FOR BILGE, BALLAST AND OIL FUEL

5.3.1 Pumping arrangements at ends of ships outside ranges of cargo tanks

5.3.1.1 The pumping arrangements in the machinery space and the forward end of the ship are to comply with the requirements for general cargo ships, unless otherwise specified in 5.3.

5.3.1.2 The internal diameter d of the bilge main and direct bilge suction in machinery spaces is not to be less than the values determined by the following formula, but the actual internal diameter of bilge main and direct bilge suction in machinery spaces may be rounded off to the nearest accepted standard size

$$d = 35 + 3\sqrt{l(B + D)} \qquad \text{mm}$$

Where:
B - Breadth of ship, in m;
D - moulded depth, in m;
l - Length of the machinery space in oil tanker, in m.

5.3.1.3 The internal diameter of branch bilge suction pipes of machinery and boiler spaces is to be in accordance with the requirements in 3.4.3.3.

5.3.1.4 Bilge, ballast and oil fuel lines, which are connected to pumps, tanks or compartments at the ends of the ship, are not to pass through cargo tanks or have any connections to cargo tanks or cargo lines, in general, no objection will be made to these lines being led through ballast tanks or void spaces within the range of the cargo tanks.

5.3.1.5 The oil fuel bunkering system is to be entirely separate from the cargo handling system.

5.3.1.6 The piping system outside ranges of cargo tanks is to be mutual independent from the piping system within ranges of cargo tanks.

5.3.2 Cargo pump room drainage

5.3.2.1 Provision is to be made for the drainage of the cargo pump rooms by pump or bilge ejector suctions. Where cargo pumps or cargo stripping pumps are used for this purpose, the bilge suctions are to be fitted with screw-down non-return valves and, in addition, a stop valve is to be fitted on the pump connection to the bilge valve chest.
The pump room bilges of small tankers may be drained by means of a hand pump having a 50 mm bore suction.

5.3.2.2 Cargo pump mom suctions are not to enter machinery spaces.

5.3.2.3 The bilge drainage of the cargo pump rooms is to comply with the relevant requirements for the prevention of pollution from ships. It is recommended that cargo pump room bilge is to be drained into the slop tanks.

5.3.2.4 All the cargo pump rooms are to be provided with bilge level monitoring devices and suitable synchronous alarm devices.

5.3.3 Cofferdam drainage within the ranges of cargo tanks

5.3.3.1 The bilge suction equipment of cofferdam is to be installed within the ranges of cargo tanks. The requirements of 5.3.2.1 are to be complied with, where cargo pumps or cargo stripping pumps are used for drainage.
Alternatively, cofferdams may be drained by bilge ejectors.

5.3.4 Ballast piping within the range of the cargo tanks

5.3.4.1 Ballast tanks within the range of cargo tanks and ballast pipelines in the double bottom tank are to be provided with separate ballast pumps and pipelines. The ballast pump is to be located in the cargo pump room or other suitable space within the range of the cargo tanks.

5.3.4.2 The ballast lines are not to pass through ballast tanks. Where this cannot be avoided, the ballast lines passing through cargo oil tanks are to be heavy gauge steel, having welded or heavy flanged joints. The pipes within the range of cargo tanks are to be not less than the value given in Table 5.3.4.2 in thickness. The number of joints is to be kept to a minimum. Where it is proposed to use material which is more resistant to corrosion than carbon steel, the pipe thickness may be suitably reduced.

Table 5.3.4.2
Pipe thickness inside cargo tanks

Outside diameter of pipes (mm)	Thickness of pipes (mm)
50	6.3
100	8.6
125	9.5
150	11.0
≥ 200	12.5

5.3.4.3 Expansion bends or bellows, not glands, are to be fitted to the ballast pipes in the cargo tanks.

5.3.4.4 For clean ballast piping, provision may be made for emergency discharge of water ballast by means of a portable spool connection to cargo oil pump and where this is arranged, a screw-down non-

return valve is to be fitted in the ballast suction to the cargo oil pump and a screw-down valve is to be fitted to the cargo oil lines.

5.3.4.5 Where the clean ballast pumps are installed in a cargo pump room, the sea inlets of these pumps are to be entirely separated from the sea inlets of the cargo pumps.

5.3.4.6 Location and separation of spaces in combination carriers are to comply with the following:

a. The slop tanks are to be surrounded by cofferdams except where the boundaries of the slop tanks where slop may be carried n dry cargo voyages are the hull, main cargo deck, cargo pump-room bulkhead or oil fuel tank. These cofferdams are not to be open to a double bottom, pipe tunnel, pump-room or other enclosed space. Means are to be provided for filling the cofferdams with water and for draining them.
b. Means are to be provided for isolating the piping connecting the pump-room with the slop tanks referred to in (a). The means of isolation are to consist of a valve followed by a spectacle flange or a spool piece with appropriate blank flanges. This arrangement is to be located adjacent to the slop tanks, but where this is unreasonable or impracticable, it may be located within the pump-room directly after the piping penetrates the bulkhead. A separate pumping and piping arrangement is to be provided for discharging the contents of the slop tanks directly over the open deck when the ship is in the dry cargo mode.
c. Hatches and tank cleaning openings to slop tanks are only permitted on the open deck and are to be fitted with closing arrangements. Except where they consist of bolted plates with bolts at watertight spacing, these closing arrangements are to be provided with locking arrangements which are to be under the control of the responsible ship's officer.
d. Where cargo wing tanks are provided, cargo oil lines below deck are to be installed inside these tanks. However, cargo oil lines may be placed in special ducts if they are capable of being adequately cleaned and ventilated subject to agreement of the Society. Where cargo wing tanks are not provided, cargo oil lines below deck are to be placed in special ducts. .

5.4 CARGO TANK VENTING ARRANGEMENTS

5.4.1 General requirements

5.4.1.1 Each cargo tank is to be fitted with venting arrangements which will limit the pressure or vacuum in the tanks. Vent pipes of cargo tanks are not to be in connection with the air pipes led from other tanks. Cargo tank venting arrangements are to be designed to provide:

a. Venting of large volumes of vapour/air mixtures during cargo handling and gas freeing operations.
b. Pressure/vacuum release of small volumes of vapour/air mixtures flowing during a normal voyage due to the change of temperature.
c. A secondary means are to be provided in the event of failure of the arrangements in (a). Alternatively, pressure sensors may be fitted in each tank protected by the arrangement required

in 5.4.1.1 (a), with a monitoring system in the ship' s cargo control room or the position from which cargo operations are normally carried out. Such monitoring equipment is also to provide an alarm facility which is activated by detection of over-pressure or under-pressure conditions within a tank.

5.4.2 Pressure/vacuum and venting systems

5.4.2.1 The pressure/vacuum system and venting system may be separate or combined and may be connected to an inert gas system.

5.4.2.2 The vent and/or pressure/vacuum valve stand pipes are to be connected to the highest part of each tank, and where combined systems are adopted, a means of isolation is to be provided between each tank and a common main. Where the cargo tanks are not fitted with separate pressure/vacuum valves, means are to be provided for maintaining the venting in the tanks when the branch pipes are being isolated. If cargo loading and ballasting or discharging of a cargo tank or cargo tank group is intended, which is isolated from a common venting system, that cargo tank or cargo tank group are to be fitted with a means for over-pressure or under-pressure protection as required in 5.4.1.1(c).

5.4.2.3 In no case are shut-ofi valves to be fitted either above or in the pipe leading to a pressure/vacuum valves. However, by-pass valves may be fitted or provision may be made to enable the tank pressure/vacuum valves to be held in an open position. The arrangements are to be such that clear indication is given when the by-pass valve is open or the pressure/vacuum valve is secured in the open position.

5.4.2.4 The pressure/vacuum valve is to be located on open deck and means are to be provided to enable the functioning of the valve to be easily checked.

5.4.2.5 Pressure/ vacuum valves are to be capable of preventing the cargo tanks from sustaining a positive pressure (generally not more than 0.021 MPa above atm.) which is greater than the testing pressure, and a negative pressure of less than 0.007 MPa below atm.

5.4.2.6 The area of the venting system used during cargo loading is to be based on the maximum design loading rate and a gas evolution factor of 1.25.

5.4.2.7 Suitable drainage arrangements are to be provided in the vapour lines where condensate might collect.

5.4.3 Arrangement of vapour outlets

5.4.3.1 Outlets from vent pipes and, where necessary, outlets/ inlets from pressure/vacuum valves are to be provided with readily renewable wire gauze or safety heads of approved type. Material of wire gauze is to be resistant to corrosion.

5.4.3.2 Vent outlets and pressure/vacuum valve, if used during loading, are to be arranged to discharge the vapour in an upward vertical direction. Vent outlets and pressure/vacuum valve inlets and outlets are to be arranged to prevent the entrance of water into the cargo tanks.

5.4.4 Height and location of cargo tank vent outlets

5.4.4.1 Vent outlets for cargo loading, required in 5.4.1.1(a) are to:

a. Permit the free flow of vapour mixtures; or
b. Permit the throttling of the discharge of the vapour mixtures to achieve a velocity of not less than 30 m/s.

And they are also to be so arranged that the vapour mixture is discharged vertically upwards.
Where the method of free flow of vapour mixtures is used, the arrangement is to be such that the outlet is to be not less than 6 m above the cargo tank deck on fore and aft gangway if situated within 4 m of the gangway and located not less than 10m measured horizontally from the nearest air intakes and openings to enclosed spaces containing a source of ignition and from deck machinery and equipment which may constitute an ignition hazard.
Where the method of high velocity discharge is used, the outlets are to be located at a height not less than 2 m above the cargo tank deck and not less than 10 m measured horizontally from the nearest air intakes and openings to enclosed spaces containing a source of ignition and from deck machinery and equipment which may constitute an ignition humid. These outlets are lobe provided with high velocity devices of an approved type.

5.4.4.2 Openings for pressure release required in 5.4.1.1(b) are to:

a. Have as great a height as is practicable above the cargo tank deck to obtain maximum dispersal of flammable vapours but in no case less than 2 m above the cargo tank deck;
b. Be arranged at the furthest distance practicable but not less than 5 m from the nearest air intakes and openings to enclosed spaces containing a source of ignition and from deck machinery and equipment which may constitute an ignition hazard.

5.5 REQUIREMENTS FOR DOUBLE HULL SPACES OF OIL TANKERS

5.5.1 Inerting, ventilation and gas measurement of double hull spaces

5.5.1.1 Double hull spaces are to be provided with suitable ventilation connections.

5.5.1.2 On tankers required to be fitted with suitable inert gas systems:

a. Double hull spaces are to be fitted with suitable connections for the supply of inert gas;
b. Where such spaces are connected to an inert gas distribution system, means is to be provided to prevent flammable grass from the cargo tanks entering the double hull spaces through the system;
c. Where such are not connected to an inert gas distribution system, appropriate means is to be provided to allow connection to the inert gas main.

5.5.1.3 Tankers are to be provided with suitable portable instruments for measuring oxygen and flammable vapour concentrations. In selecting these instruments, due attention is to be given for their use in combination with the gas sampling systems referred to in 5.5.1.4.

5.5.1.4 Where atmosphere in double hull spaces cannot be reliably measured using flexible gas sampling hoses, such spaces are to be fitted with permanent gas sampling lines. The configuration of such line systems is to be adapted to the design of such spaces.

5.5.1.5 The materials of construction and the dimensions of gas sampling lines are to be such as to prevent restriction. Where plastic materials are used, they are to be electrically conductive.

5.6 REQUIREMENTS FOR OIL TANKERS INTENDED FOR CARRIAGE OF CARGO OIL HAVING A FLASH POINT EXCEEDING 60 °C

5.6.1 General requirements

5.6.1.1 For oil tankers intended for the carriage of cargo oil having a flash point above 60 °C (closed cup test) and where the maximum temperature heated for the cargo oil in cargo oil tanks is at least 10°C below the flash point of the cargo oil, the requirements of this Chapter are to be complied with, but the following in this Chapter may not be applicable:
5.1.2, 5.1.4, 5.1.6.1(a), 5.1.9, 5.2.2.1 to 5.2.2.5, 5.2.3.1, 5.2.3.2, 5.2.4.5, 5.3.2.1, 5.3.2.2, 5.3.3.1, 5.3.4.1, 5.3.4.4, 5.4.1.1, 5.4.2.1 to 5.4.2.7, 5.4.3 and 5.4.4.

5.6.1.2 Cargo oil pumps may be located in the engine rooms or other spaces equivalent to the engine rooms.

5.6.1.3 The locations of oil pumps are to be fitted with independent fixed power ventilation systems of the extraction type.

5.6.2 Vent pipes of cargo tanks

5.6.2.1 Vent pipes are to be led from the highest part of the tank to the open area above the freeboard deck and such pipes are not to be connected to those of other than cargo oil tank spaces.

5.6.2.2 Vent pipes required in 5.6.2.1 may be fitted for each cargo oil tank, vent pipes required for several cargo oil tanks may also be led to a common main, but it is proposed that a pressure/vacuum valves is to be fitted on the common main.

5.6.2.3 The height of the outlet ends of vent pipes (including branch and main) are to be not less than 760 mm above the freeboard deck.

5.6.2.4 The outlet ends of vent pipes are to be provided with a wire gauze diaphragm of corrosion-resistant material which can be readily removed for renewal.

CHAPTER 6 BOILERS AND PRESSURE VEQSELS

6.1 GENERAL REQUIREMENTS

6.1.1 Application

6.1.1.1 The requirements of this Chapter are applicable to boilers and pressure vessels of Welded construction.

6.1.2 Classification

6.1.2.1 For the purpose of the Rules, boilers and pressure vessel are divided into three classes in in accordance with the design pressure p (Mpa), thickness ∂ (mm) of cylindrical shell, working temperature t (C) of cylindrical shell, see Table 6.1.2.1.

Table 6.1.2.1
Classes of boilers and pressure vessels

	Class I	Class II	Class III
Boilers	p > 0.35	p ≤ 0.35	_
Pressure Vessels	p > 3.92 or δ >40 or t >350	p, δ and t are all less than those specified for Class I, but p > 1.57 or δ > 16 or t > 150	p ≤ 1.57 and ≤ 16 and t ≤ 150

6.1.2.2 The small auxiliary boilers mentioned in this Chapter are the boilers having an evaporating capacity not exceeding 1000 kg per hour and a design pressure not exceeding 0.78 MPa.

6.1.3 Design pressure

6.1.3.1 Strength calculations for boilers and pressure vessels are to be based on the design pressure. The design pressure is the maximum permissible working pressure and is to be not less than the highest set pressure of safety valve.
The design pressure of economizers is the maximum working pressure of the medium in the economizer.

6.1.3.2 It is desirable that there should be a margin between the normal pressure at which the pressure vessel operates and the lowest pressure at which any relief valve is set to lift, to prevent unnecessary lifting owl the relief valve.

6.1.4 Metal temperature

6.1.4.1 The metal temperature is to be taken as the actual metal temperature expected under operating conditions for the pressure part concerned, and is to be stated in the relevant plans of design.

6.1.4.2 The metal temperature of boiler parts is, in any case, not to be less than the value given in Table 6.1.4.2, nor less than 250 C.
The metal temperature of the pressure vessel parts in direct contact with hot medium is to be taken as the highest working temperature of the medium.

Table 6.1.4.2
Metal temperature of boiler parts

Service condition / Boiler parts	Not heated by hot gas	Heated by hot gas but adequately protected by insulation	Subject to convection heat	Subject to radiant heat
Steam, water drums and headers	t	t + 10 °C	t + 50 °C	–
Superheater drums or headers	t + 15 °C	t + 30 °C	t + 50 °C	–
Boiler tubes	–	–	t + 25 °C	t + 50 °C
Superheater tubes	–	–	t + 35 °C	t + 50 °C
Economizer tubes	–	–	t + 30 °C	–
Fumaces and rear tube plates of dry-back combustion chambers	–	–	–	t + 90 °C
Wet-back combustion chambers	–	–	–	t + 50 °C

Note:
t- Working medium temperature, °C.

6.1.5 Plans and documents

6.1.5.1 The following plans and documents of boilers are to be submitted to the Society for approval:

a. General arrangement;
b. Body construction (including details of welded connections, attachments and supports);
c. Construction of pressure parts (cylindrical shell, steam and water drums, headers, combustion chamber, furnace, superheater, desuperheater, economizer, etc.);
d. Arrangements of mountings and fittings;
e. Safety valves with diameter calculation;
f. Strength calculations;
g. Heat treatment procedures of welded connections;
h. Test pressure.

6.1.5.2 The following plans and documents of pressure vessels are to be submitted to the society for approval:

a. General arrangements
b. Body construction (including details of welded connections, attachments and supports);
c. Construction of pressure parts (cylindrical shell, end plate, etc.);
d. Arrangement of mountings and fitings;
e. Strength calculations;
f. Test pressure.

6.1.6 Materials

6.1.6.1 The materials used in the construction of boilers and pressure vessels are to be in compliance with the relevant provisions contained in the Rules for Materials and Welding by the Society. Where it is proposed to use materials other than those specified in the aforesaid, details of the mechanical properties (including mechanical property values used for the calculation of allowable stresses), chemical compositions and heat treatment are to be submitted to the Society for approval .

6.1.7 Plate cutting

6.1.7.1 Plates are to be cut to size and shaped by machine flame cutting and/or machining. Where the plate thickness does not exceed 25 mm, cold shearing may be used provided that the sheared edge is cut back by machine or chipping for a distance of 1/4 of the plate thickness, but in no case by lea than 3 mm. After being cut and before further work is carried out upon them, all plate edges are to be examined for laminations and cracks.

6.1.8 Forming

6.1.8.1 Plates for shell sections and end plates are, so far as possible, to be hot and cold formed by machine. Forming by hammering is not to be employed. Whether heating is applied or not, forming is not to impair the quality of the material. The Surveyor may require a forming procedure test to be conducted when necessary.

6.1.3.2 After forming, both shell plates and end plates are to be suitably heat treated. This heat treatment may be held concurrently with post-weld heat treatment.

6.1.9 Allowable stress

6.1.9.1 The allowable stressofboileraudpressurevesselpaltsistobedetem-tinedbythefollowingfonmilae, and the lower value is to be taken:

a. Metal temperature equal to or less than 50°C.

$$[\sigma] = \sigma_b/2.7; \qquad [\sigma] = \sigma_s/1.5$$

b. Metal temperature more than 50°C.

$$[\sigma] = \sigma_b/2.7; \qquad [\sigma] = \sigma_s^T/1.5; \qquad [\sigma] = \sigma_D^T/1.5$$

c. Pressure vessels for stowage of liquid gas

$$[\sigma] = \sigma_b/3.0; \qquad [\sigma] = \sigma_s/2.0$$

Where:

$[\sigma_b]$ – specified tensile stress of material at room temperature, in N/mm^2;

$[\sigma_s]$ – Specified yield stress of material at room temperature, in N/mm^2;

$[\sigma_s^T]$ – Specified yield stress or proof stress of material at metal temperature, in N/mm^2;

$[\sigma_D^T]$ – Average stress to produce rupture in 10^5 h of material at metal temperature, in N/mm^2;

The allowable stress for steel castings is to be taken as 80% of the value determined by the method indicated above, using the appropriate value for cast steel.

6.1.10 Joint factor of welded seam

6.1.10.1 For welded seams welded on both side or on one side with a sealing run, the joint factor used in the equations in this Chapter is given in Table 6.1.10.1 based on the method of examination employed. For boilers of Class II and pressure vessels of Classes II and III where higher joint factor of welded seam than that required for the respective class is selected, the welded seams are to be examined in accordance with the requirements for the higher joint factor of welded seam.

Table 6.1.10.1
Joint factor of welded seam φ

Class	Joint factor of welded seam φ	Radiographic examination	Routine weld test	Heat treatment
Class I	1	Required, see the Rules for Materials and Welding	Required	See the Rules for Materials and Welding
Class II	0.85	Required, see the Rules for Materials and Welding	Required	See the Rules for Materials and Welding
Class III	0.60	–	–	–

6.1.11 Welding and heat treatment

6.1.11.1 The welding, welds examination and post-welding heat treatment of all pressure parts of boilers and pressure vessels are to comply with the requirements of the Rules for Materials and Welding by the Society.

6.1.11.2 Cold-formed cylindrical shells of boilers and pressure vessels are lobe subject to stress relief heat treatment, which may be carried out together with the post-welding heat treatment. For cylindrical shell having an inner diameter greater than or equal to 20 times the thickness of shell plate, the heat treatment may be dispensed with.

6.1.11.3 Hot formed part of boilers or pressure vessels are to be normalized provided that hot forming iir not to carried out at a temperature within the normalizing range. Parts made of alloy steel are, in addition, to be tempered as necessary.

6.1.12 Miscellaneous

6.1.12.1The boilers are to be so arranged as to prevent shifting after installation on board, and the boiler stools are to be secured in such a way as to be able to take the thermal expansion of the drums and headers.

6.1.12.2 Boiler mountings and fittings are to be installed and arranged in positions accessible for safe operation, examination and repair.

6.1.12.3 Boilers are to be adequately insulated. The insulation is to have a metallic sheathing. When the boiler is under working conditions, the temperature of the sheathing is generally not to exceed 60 C.

6.1.12.4 The spare parts for boilers are to comply with the relevant provisions contained in Chapter 15.

6.2 WATER TUBE BOILERS

6.2.1 Cylindrical shells

6.2.1.1 The minimum thickness of the cylindrical shell and tube plate of steam or water drums is to be determined by the following formula:

$$\delta = \frac{pD_o}{2[\sigma]\varphi - p} + 0.75 \quad \text{mm}$$

Where:
p - Design pressure of boiler as specified in 6.1.3.1 , in MPa;
D_0 - inside diameter of cylindrical shell, in mm;
$[\sigma]$ - allowable stress, to be determined in accordance with 6.1.9.1 of this Chapter, in N/mm^2;
φ - Minimum strength factor of cylindrical shell, to be determined in accordance with 6.2.2.1.

This formula is applicable only where the resulting thickness does not exceed 0.5 times the inner radius of cylindrical shell.

6.2.1.2 The minimum thickness of a cylindrical shell of boilers is to be not less than 6.0 mm.

6.2.1.3 For tube plates, such thickness as will give a minimum parallel seat of 9.5 mm, or such greater width as may be necessary to ensure lube lightness (see 6.9.3 of this Chapter).

6.2.2 Strength factor of cylindrical of shell

6.2.2.1 The strength factor ø of the cylindrical shell is to be determined as follows:

a. For welded cylindrical shell unweakened by the tube holes, the strength factor φ is to be the same as the joint factor of the welded seam given in Table 6.1.10.1. For seamless cylindrical shell, φ is equal to 1.

b. Strength factor of cylindrical shell weakened by the tube holes is to be determined as follows:
b.1 For tube holes of same diameter disposed with regular staggered spacing or regular drilling and having the same pitch in longitudinal direction as shown in Fig. 6.2.2.1(a) and Fig. 6.2.2.1 (c) the strength factor of cylindrical shell is to be determined by the following formula:

$$\varphi_1 = \frac{t_1 - d}{t_1}$$

b.2 For tube holes of same diameter disposed with regular staggered spacing (the holes in any row are shifted in relation to those in the adjacent row by half a pitch in longitudinal direction) and having the pitch both in longitudinal and transverse directions as shown in Fig. 6.2.2.1 (b),

the strength factor of cylindrical shell in longitudinal direction converted from that in diagonal direction is to be determined by the following formula:

$$\varphi_2 = K\varphi_k$$

Where: $K = \dfrac{1}{\sqrt{1 - \dfrac{0.75}{(1 + m^2)^2}}}$, or taken from Fig. 6.2.2.1(2)

Where: $m = \dfrac{t_1}{t_2}$;

$$\varphi_k = \frac{t_k - d}{t_k}.$$

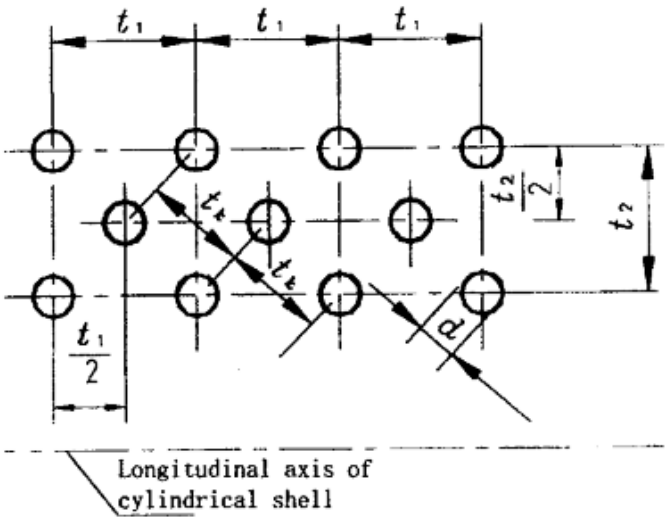

Fig. 6.2.2.1(a)

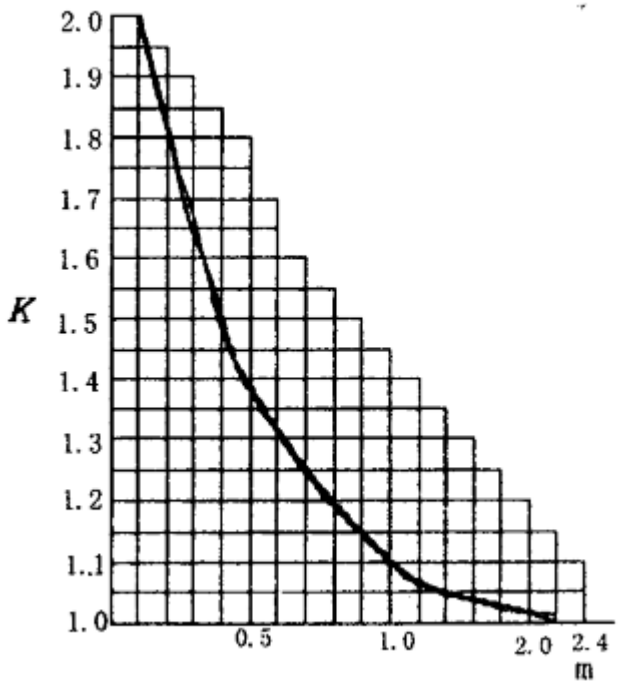

Fig. 6.2.2.1(b)

The strength factor ø of cylindrical shell is to be selected from either of the above two values obtained from b.1 and b.2, whichever the smaller.

b.3 For tube holes of same diameter disposed with regular as shown in Fig.6.2.2.1(b), if the pitch t2 in transverse direction is smaller than pitch t1/ 2 in longitudinal direction, the strength factor of cylindrical shell is to be taken as $2ø_3$ in stead of ø1 as determined by 6.2.2.1(b). $ø_3$ is to be determined by the following formula:

$$\varphi_3 = \frac{t_2 - d}{t_2}$$

The tube pitch t_2 in transverse direction is to be the pitch in way of the centre surface of lube holes.

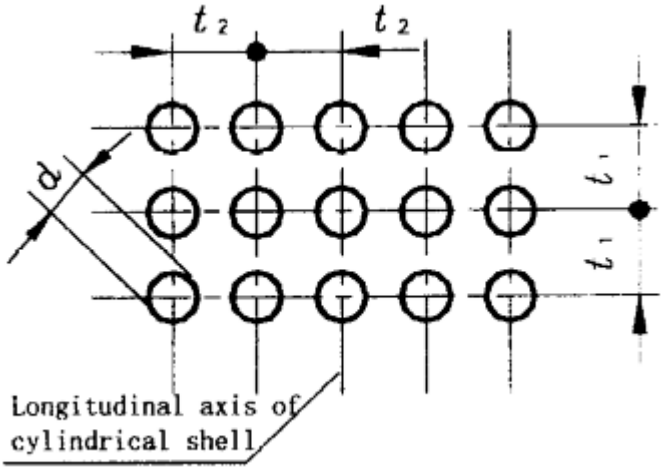

Fig. 6.2.2.1(c)

1.2.2.2 For tube holes of same diameter with distance between centres adjacent tube holes not constant, as shown in Fig.6.2.2.2, the strength factor (1 of cylindrical shell is to be determined by the following formula:

$$\varphi_1 = \frac{t_1 + t'_1 - 2d}{t_1 + t'_1}$$

In such a case, the double pitch (t1+t'1) chosen is to be that which makes a minimum, and in no case is to be taken as greater than twice $2t_1$.

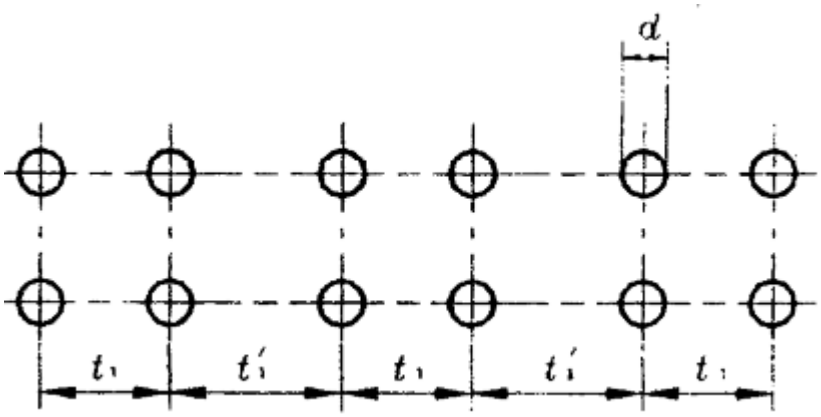

Fig. 6.2.2.2

6.2.2.3 Where tube holes of two different diameters are alternately disposed, the diameter of tube holes is to be replaced by the mean value of the diameters.

6.2.3 Compensating effect of tube stubs

6.2.3.1 Where a drum or header is drilled for tube stubs fitted by strength welding (see 6.8.1.3), the effective diameter of holes used for calculation of the strength in hole line may be replaced by equivalent diameter dc of holes, which is to be taken as:

$$d_c = d - \frac{A}{\delta} \quad \text{mm}$$

Where: d- the actual diameter of the hole, in mm;

δ - the thickness of the shell, in mm;

A - the compensating area provided by each tube stub and its welding filets, in mm as shown in Fig. 6.2.3.1(a) or (b), (the area in the shade line is a half compensating area A , in which:

δ 1 - actual thickness of the tube stub, in mm;

δ 3 - minimum thickness of the lube stub required in 6.2.9.1, in mm;

$h = \sqrt{d\,\delta 1}$, in mm,

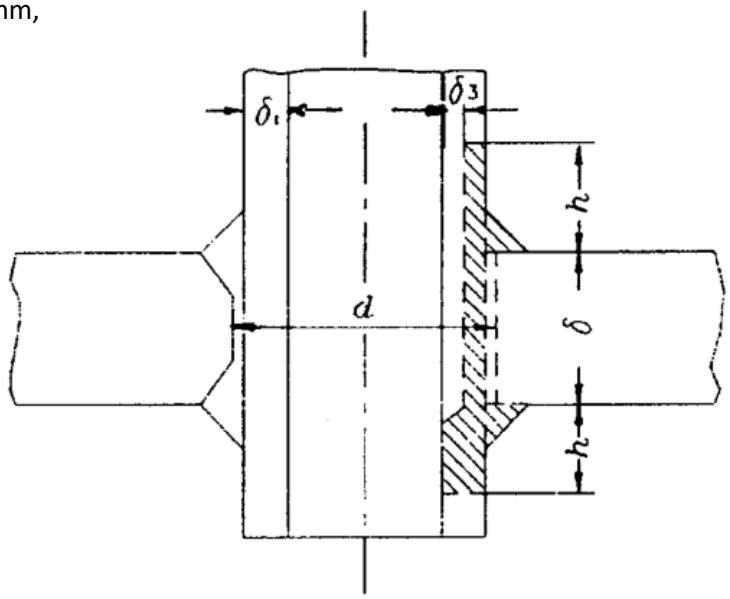

Fig. 6.2.3.1(a)

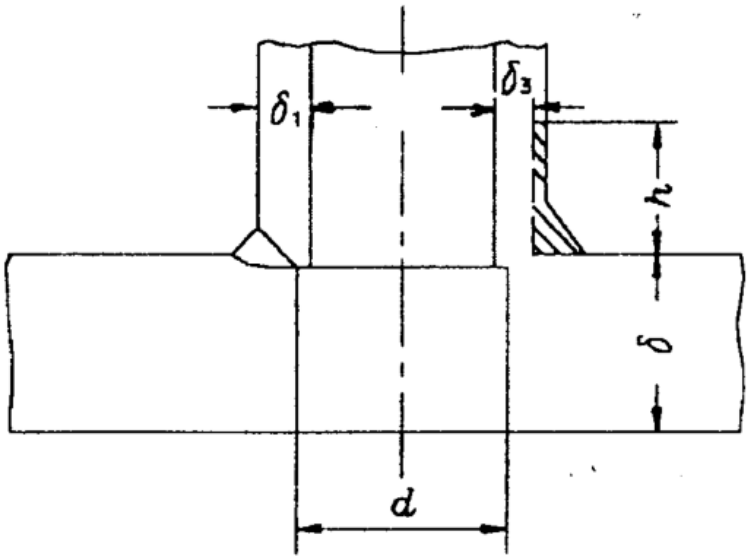

Fig. 6.2.3.1(b)

6.2.3.2 Where the material of the tube stub has an allowable stress lower than that of the shell, the cross-sectional area of the stub is to be multiplied by the following ratio for correction:

a. Allowable stress of stub at design temperature;
b. Allowable stress of shell at design temperature.

6.2.4 Spherical shells

6.2.4.1 The minimum thickness of spherical shells subject to internal pressure is to be determined by the following formula:

$$\delta = \frac{pD_o}{4[\sigma]\varphi - p} + 0.75 \quad \text{mm}$$

Where:

Do - inside diameter of the shell, in mm;
p - Design pressure, as specified in 6.1.3.1, in MPa;
$[\sigma]$ - allowable stress, to be determined in accordance with 6.1.9.1, in N/mm^2;
φ - Strength factor of shell, to be taken in accordance with joint factor of welded seam given in Table 6.1.10.1.

Spherical shells with openings are to be reinforced in accordance with 6.8.2.1 to 6.8.2.3.
The above mentioned formula is applicable only where the resulting thickness does not exceed half the internal radius of the shell.

6.2.5 Dished ends

6.2.5.1 The minimum thickness of ellipsoidal, torispherical and hemispherical end plates subject to pressure on the concave side, as shown in Figs. 6.2.5.1(a) to (c), is to be determined by the following formula:

$$\delta = \frac{pD_1 y}{2[\sigma]\varphi} + 0.75 \qquad \text{mm}$$

Where:

D1 – outside diameter of the end plate, in mm;
p - design pressure, as specified in 6.1.3.1 , in MPa;
$[\sigma]$ – allowable stress, to be determined in accordance with 6.1.9.1, in N/mm^2;
φ - applying to joint factor welded seam or the minimum strength factor of drum shell (see 6.2.2);
y – shape factor, to be obtained from Fig. 6.2.5.1(d) .

For ends without openings, the value of y is to be selected from the group of solid curves, dependent on the ratio of δ/D1 and H/D1 ;
For ends with unreinforced openings, the value of y is selected from the group of dotted curves, dependent on the ratio of $d/\sqrt{D1\delta}$ and H/D1, where: d - the diameter of the largest opening in the end plates, in mm (in the case of an elliptical opening, the major axis of the ellipse is to be taken) .

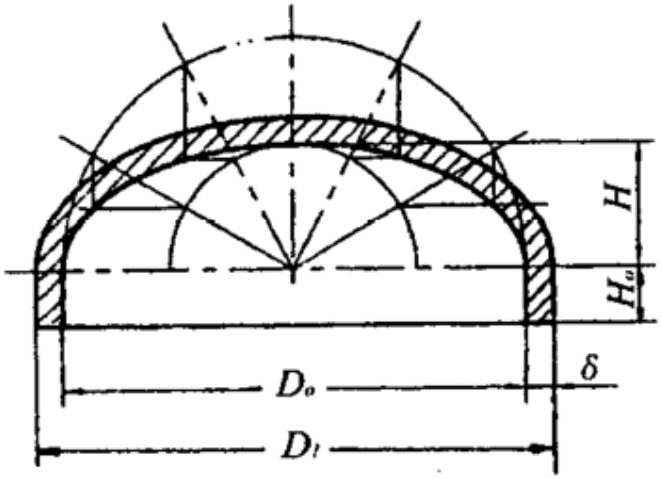

Fig. 6.2.5.1(a)

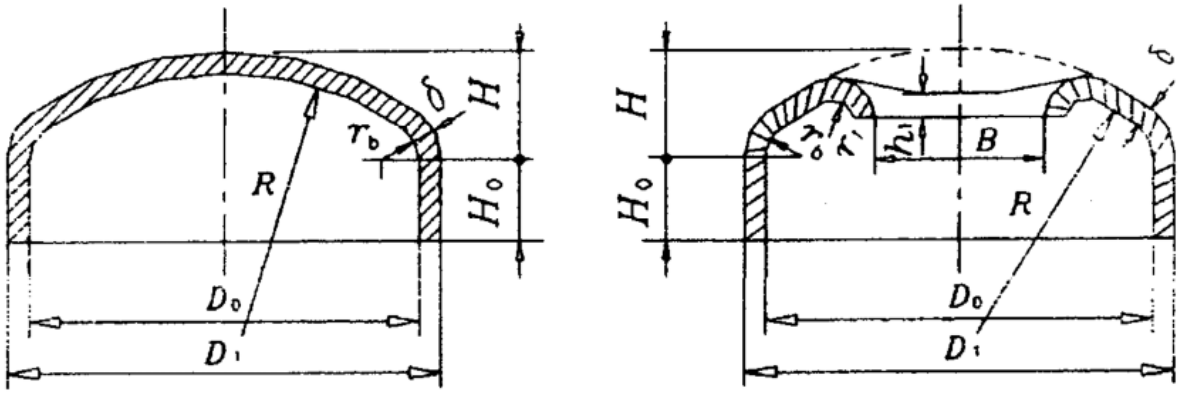

Fig. 6.2.5.1(b)

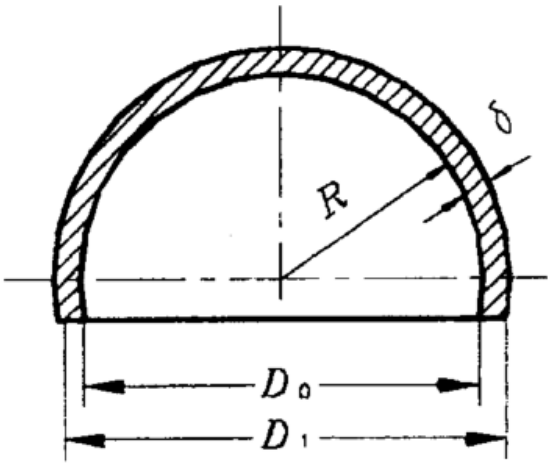

Fig. 6.2.5.1(c)

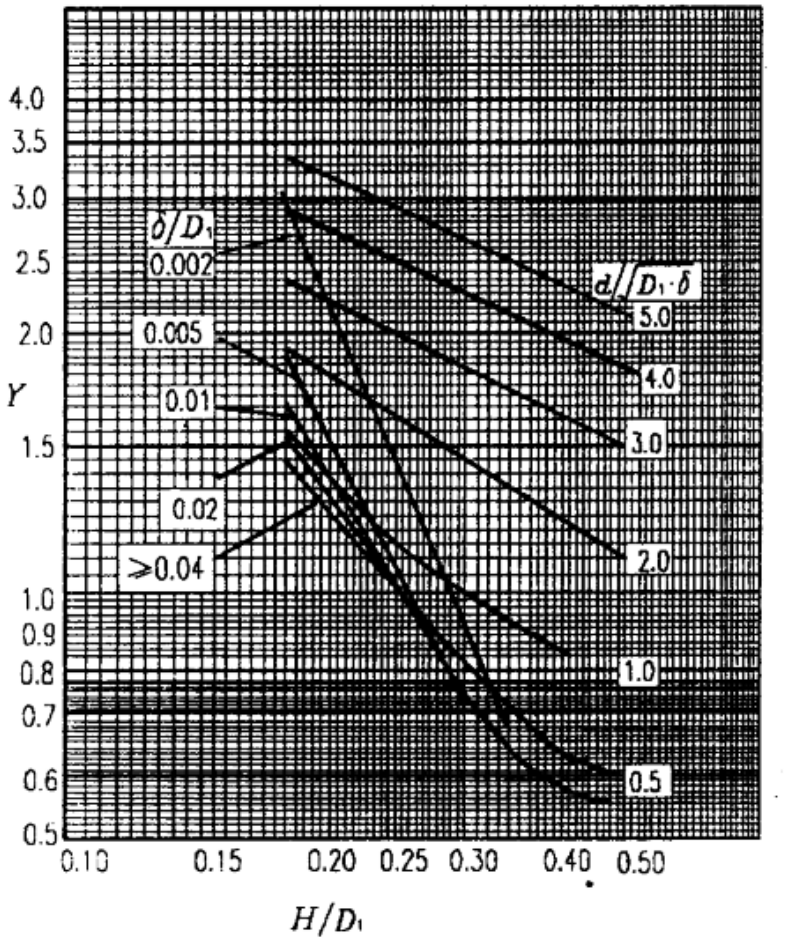

Fig. 6.2.5.1(d)

For openings with effective reinforcement, the opening factor may be determined according to 6.8.2.1. The location of openings and construction of dished ends are to comply with the requirements of 6.2.5.2 and 6.2.5.3.

Where the ends are made from more than one plate and welded, the minimum thickness determined by above formula is to be modified by taking account of the joint factor according to6.1.10.1.

For ends which are butt welded to the drum shell, the thickness of the edge of the flange for connection to the shell is to be not less than the thickness of an unpierced seamless or welded shell, whichever is applicable, determined in 6 .2.1.1.

6.2.5.2 Openings in ellipsoidal and torispherical ends are to be in accordance with the following requirements, as shown in Fig. 6.2.5.2.

a. The projectional distance from the edge of bole to the outside edge of the end plate is not tn be less than 0.1 D1.

b. The projectional distance between two adjacent openings is not to be less than the diameter of the smaller opening.

6.2.5.3 The construction of dished ends is to comply with the following requirements:

a. For torispherical ends, see Fig. 6.2.5.1 (b):

$rb \geq 0.1D_1$ or $rb \geq 3\,\delta$, whichever is the greater,

$R \leq D1$; $H \geq 0.18D_1$ and $H_0 \geq 2\,\delta$

b. For ellipsoidal ends, see Fig. 6.2.5.1 (a):

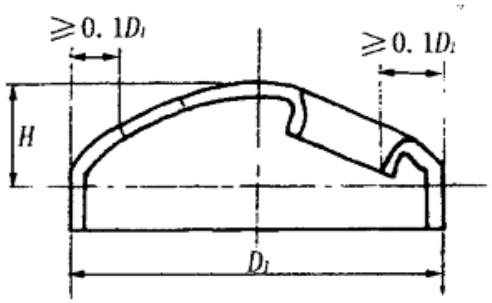

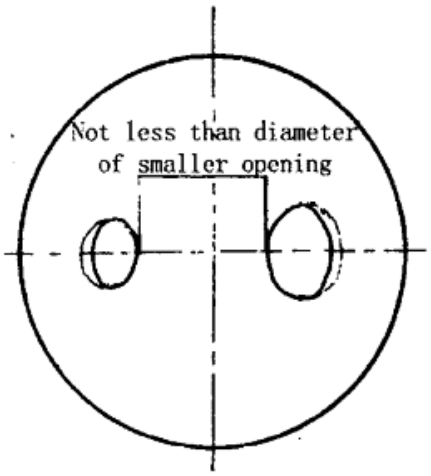

$H \geq 0.20D_1$; $H_0 \geq 2\,\delta$

c. For manhole flanges in ellipsoidal, torispherical and hemispherical ends, (In no case is the manhole flange to be taken as the opening reinforcement) , see Fig. 6.2.5.1 (b):

$H_1 \geq \sqrt{B\delta}$, where B is the minor axis of manhole,

$R1 = (1.5 \sim 2)\,\delta$

6.2.5.4 The minimum thickness of a dished end is to be not less than 6.0 mm.

6.2.6 Conical ends subject to internal pressure

6.2.6.1 For the construction of conical ends and conical reducing sections, see Fig. 6.2.6.1(a) to (d).

Connections between cylindrical shell and cortical sections and ends are preferably to be by means of a knuckle transition radius. Alternatively, conical sections and ends may be butt welded to cylinders without a knuckle radius where the change in angle of slope 99 between the two sections under consideration does not exceed 30 C.

Conical ends may be constructed of several ring sections of decreasing thickness, as determined by the corresponding decreasing diameter.

The minimum thickness of conical ends or sections is to be determined by the formulae specified in 6.2.6.2 and 6.2.6.3, but the thickness of plates at the knuckle and Within the distance L from the knuckle is not to be less than the thickness of the section to which it is connected.

6.2.6.2 The minimum thickness B of the cylinder, knuckle and conical end or section at the junction and within the distance L (see Fig.6.2.6.1) from the junction is to be determined by the following formula:

$$\delta = \frac{pD_1 y}{2[\sigma]\varphi} + 0.75 \qquad \text{mm}$$

Where:

p - design pressure, as specified in 6.1.3.1 , in MPa;

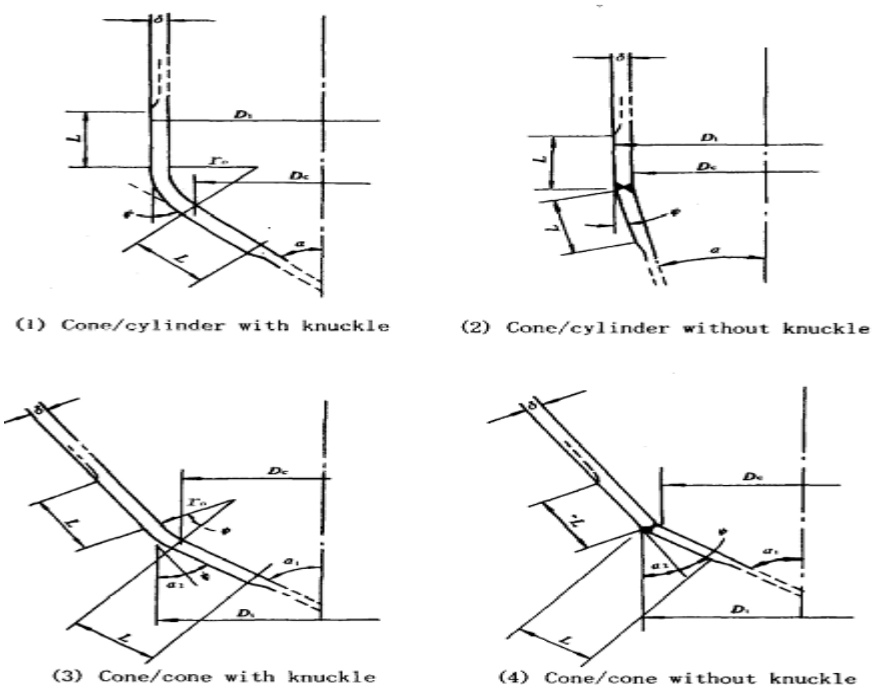

(1) Cone/cylinder with knuckle (2) Cone/cylinder without knuckle

(3) Cone/cone with knuckle (4) Cone/cone without knuckle

Fig. 6.2.6.1

D1 – outside diameter of the cylinder, conical end or section, in mm, see fig. 6.2.6.1 (1) to (4);

φ - Joint factor of welded seam, to be selected in accordance with Table 6.1.10.1. Where the distance of a circumferential seam from the knuckle or junctions is not greater than L.

K - A factor, see Table 6.2.6.2;
[σ] – allowable stress, to be determined in accordance with 6.1.9.1, in N/mm^2;

Table 6.2.6.2
Factor K

ψ / r_0/D_1	0.01	0.02	0.03	0.04	0.06	0.8	0.1	0.15	0.2	0.3	0.4	0.50
	Values of K (corresponding to r_0/ D_1											
10°	0.70	0.65	0.6	0.60	0.55	0.55	0.55	0.55	0.55	0.55	0.55	0.50
20°	1.00	0.90	0.85	0.80	0.70	0.65	0.60	0.55	0.55	0.55	0.55	0.55
30°	1.35	1.20	1.1	1.00	0.90	0.85	0.80	0.70	0.65	0.55	0.55	0.55
45°	2.05	1.85	1.65	1.50	1.30	1.20	1.10	0.95	0.90	0.70	0.55	0.55
60°	3.20	2.85	2.55	2.35	2.00	1.75	1.60	1.40	1.25	1.00	0.70	0.55
75°	6.80	5.85	5.35	4.75	3.85	3.50	3.15	2.70	2.40	1.55	1.00	0.55

The distance L mentioned in this Article, as shown in Figs. 6.2.6.1(1) to (4), is to be determined by the following formula:

$$L = 0.5\sqrt{\frac{D_1\delta}{\cos\psi}} \quad \text{mm}$$

Where:
ψ-difference between angle of slope of two adjoining conical sections, see Fig. 6.2.6.1;
r_0 - inside radius of transition knuckle, in mm, which is to be taken as 0.01 D_0, in the case of conical sections without knuckle transition.

6.2.6.3 The minimum thickness δ of those parts of conical sections not less than a distance L from the junction with a cylinder or other conical section is to be determined by the following formula:

$$\delta = \frac{pD_C}{2[\sigma]\varphi' - p} \cdot \frac{1}{\cos\alpha} + 0.75 \quad \text{mm}$$

Where:
Dc – inside diameter, in mm, of conical section or end at the position under consideration, see Figs. 6.2.6.1(1) to (4);
p - Design pressure, as specified in 6.1.3.1, in MPa;
φ - Joint factor of welded seam, to be selected in accordance with Table 6.1.10.1.
[σ] – allowable stress, to be determined in accordance with 6.1.9.1, in N/mm^2;
α - angle of slope of conical section to the vessel axis e.g. α_1 α_2, α_1 as shown in Figs. 6.2.6.1(1) to (4).

The thickness of conical sections having an angle of inclination to the vessel axis of more than 75° is to be determined as for a flat plate.

6.2.7 Headers

6.2.7.1 The minimum thickness for cylindrical shells of circular section headers is to be calculated in accordance with the requirements of 6.2.1.1.

6.2.7.2 The minimum thickness of rectangular section headers is to be determined by the following formulae, the greater of two thicknesses obtained taken:

a. Thickness at the comer of the header:

$$\delta = \frac{p\sqrt{m^2 + l^2}}{2.6[\sigma]} + \sqrt{\frac{4.5M_k p}{[\sigma]}} \quad \text{mm}$$

b. Thickness at flat surfaces of the header:

$$\delta = \frac{pl}{2.6[\sigma]\varphi} + \sqrt{\frac{4.5M_b p}{[\sigma]\varphi_1}} \quad \text{mm}$$

Where:

p - design pressure, as specified in 6.1.3.1 , in MPa;

[σ] – allowable stress, to be determined in accordance with 6.1.9.1, in N/mm^2;

m -half the clear width of the header wall to which the strength calculations are made, in mm;

l - half the clear width of another wall of the header, in mm;

b - distance measured from the center line of weaken holes to axis of header, in mm, see Fig. 6.2.7.2 (1);

M_k - factor of bending moment at the comer of the header, in mm^2:

$$M_k = \frac{1}{3}\frac{m^3 + l^3}{m + l}$$

M_b -factor of bending moment at the flat surface of the header, in mm ^{2}, use the absolute value for negative;

$$M_b = M_k - \frac{m^3 - b^3}{2}$$

φ φ1- strength factor

$$\varphi = \frac{t - d}{t}$$

$$When \frac{d}{m} < 0.6, \varphi_1 = \varphi ;$$

$$When \frac{d}{m} \geqslant 0.6, \varphi_1 = 1 - 0.6\frac{m}{t}$$

Where:

t - pitch between holes, in mm;

d - diameter of holes in the header, in mm. For elliptical holes, the value d adopted in the formula of φ is to be replaced by the dimension α in a direction parallel to the longitudinal axis of the header, and value d in d/m is to be replaced by the dimension in transverse direction, see Fig.6.2.7.2(2) .

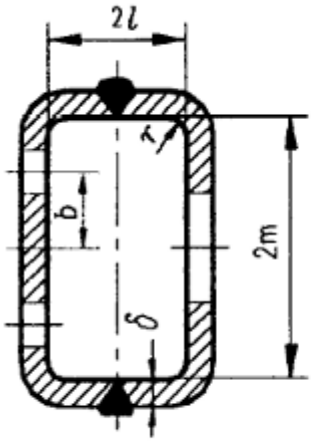

Fig. 6.2.7.2(1)

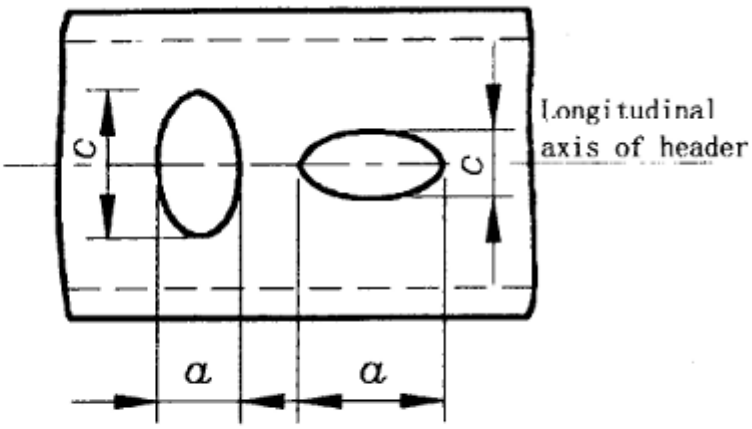

Fig. 6.2.7.2(2)

Fig. 6.2.7.2

6.2.7.3 Where the tube holes in the header are disposed with regular staggered spacing symmetrical to the center line of the header (see Fig. 6.2.7.3), in addition to the calculation of header thickness in accordance with 6.2.7.1 or 6.2.7.2, the thickness δ at the diagonal line of tube holes is to be calculated in accordance with the following formula:

$$\delta = \frac{pl}{2.6[\sigma]\varphi_k} + \sqrt{\frac{4.5M_b'p}{[\sigma]\varphi_k}} \quad mm$$

Where:

$$M_b' = \left(\frac{1}{3} - \frac{m^3 + l^3}{m + l} - \frac{m^2}{2}\right)\cos\alpha \ ;$$

$$\varphi_k = \frac{t_k - d}{t_k} \ ;$$

α、t_k —— indicated in Fig. 6.2.7.3.

Other symbols are as defined in 6.2.7.2.

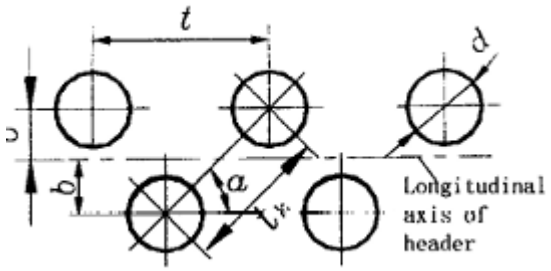

Fig. 6.2.7.3

6.2.7.4 The radius r at the comer of the header, (as shown in Fig. 6.2.7.2(1)), is not to be less than 8 mm. Where the header wall is weakened by tube holes, the strength factor φ or φk is, as a rule, not to be less than 0.325. The minimum header wall thickness is not to be less than 8 mm, where tubes are fitted by expanding, the minimum header wall thickness is not to be less than 14 mm.

6.2.7.5 In welded headers, the distance measured from the center of tube holes to the edge of the welded seam is to be not less than 0.9 times the diameter of hole, and openings in the welded zone are to be avoided as far as practicable.

6.2.8 Flat end plates

6.2.8.1 The minimum thickness of flat end plates is to be determined by the following formula:

$$\delta = CD\sqrt{\frac{p}{[\sigma]}} + 0.75 \qquad \text{mm}$$

Where:

p - Design pressure, as specified in 6.1.3.1, in MPa;

[σ] – allowable stress, to be determined in accordance with 6.1.9.1, in N/mm^2;

D - Calculated diameter of cylindrical shell, in mm.

In the case of rectangular flat end plates, the diameter D for calculations to be replaced by an equivalent diameter determined by the following formula:

$$D = a\sqrt{\frac{2}{1+(\frac{a}{b})^2}}$$

Where:
a - length of short side of rectangular end plate, in mm;
b - length of long side of rectangular end plate, in mm;
c - constant, to be selected in accordance with Table 6.2.8.1.

Table 6.2.8.1
Constant

Type of flat end plate	Circular flat en plate *C*	Rectangular flat end plate *C*
Fig. 6.2.8.1 (1)	0.38	_
Fig. 6.2.8.1 (2)	0.43	0.50
Fig. 6.2.8.1 (3); (4) (a); (4) (b)	0.52	0.57
Fig. 6.2.8.1 (4) (c) *l/D = 0.05* *l/D = 0.10* l/D = 0.15	0.57 0.62 0.67	– – –

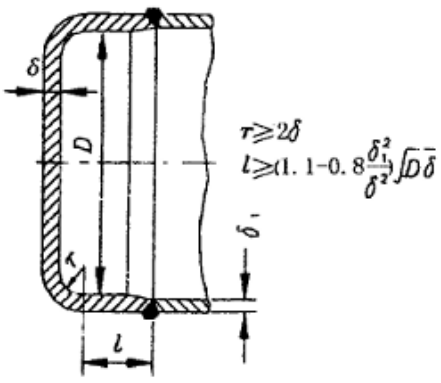

Fig. 6.2.8.1(1)

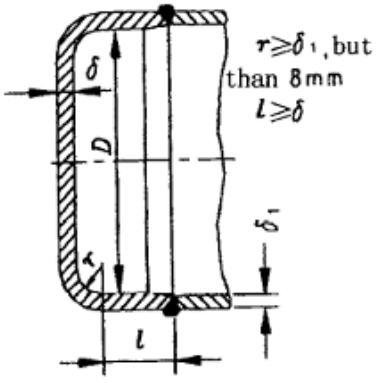

Fig. 6.2.8.1(2) (Unit: mm)

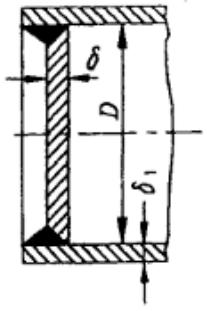

Fig. 6.2.8.1(3)

6.2.8.2 For circular flat end plates with opening, the minimum thickness of flat end plates is to be increased by 12% of the thickness required 6.2.8.1.

6.2.9 Boiler tubs subject to internal pressure

6.2.9.1 The minimum wall thickness of boiler tubes subject to internal pressure is to be determined by the following formula, but is in no case to be less than that required in 6.2.9.2:

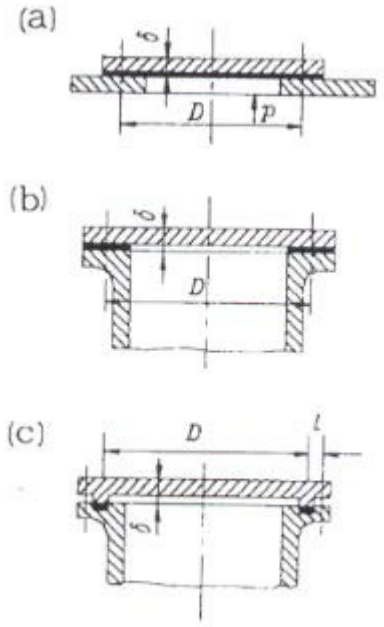

Fig. 6.2.8.1(4)

$$\delta = \frac{pD_1}{2[\sigma] + p} \quad \text{mm}$$

Where:

D_1 – outside diameter of tubes, in mm.

p - Design pressure, as specified in 6.1.3.1, in MPa;

[σ] – allowable stress, to be determined in accordance with 6.1.9.1, in N/mm^2;

6.2.9.2 For boiler tubes calculated by 6.2.9.1, the thickness is in no case to be less than the minimum thickness as given in Table 6.2.9.2, and in addition, provision is to be made for minus tolerances of tubes, bending allowances and abnormal corrosion which might be expected in service.

Table 6.2.9.2
Minimum thickness of boiler tubes (mm)

outside diameter of tube (mm)	Minimum thickness (mm)	Outside diameter of tube (mm)	Minimum thickness (mm)
≤ 38	1.75	> 75 ≤ 95	3.05
> 38 ≤ 50	2.16	> 95 ≤ 100	3.28
> 50 ≤ 70	2.40	> 100 ≤ 125	3.50
> 70 ≤ 75	2.67		

Note:
For water tubes subject to internal pressure used for smoke tube boilers and vertical auxiliary boilers, the minimum thickness is not to be less than 3 mm.

6.3 HORIZONTAL SMOKE TUBE BOILERS

6.3.1 Cylindrical shell

6.3.1.1 The minimum thickness of the cylindrical shell is to be determined in accordance with 6.2.1.1

6.3.1.2 Where the cylindrical shell is made of two sections, the longitudinal welded seams of the two sections are to be shifted for a distance at least 200 mm apart.

6.3.1.3 Where the steam dome is connected to the boiler shell by fillet welding, groove welding on both sides or groove welding on one side with sealing run is to be used.

6.3.2 Stayed flat surfaces

6.3.2.1 For flat plates supported by welded-in stays or by welded-in stays and flange connection, the minimum thickness is to be determined by the following formula:

$$\delta = Ct\sqrt{\frac{p}{[\sigma]}} + 0.75 \quad \text{mm}$$

Where:
p - Design pressure, as specified in 6.1.3.1, in MPa;
[σ] – allowable stress, to be determined in accordance with 6.1.9.1, in N/mm^2;
C - Constant, to be selected in accordance with Table 6.3.2.1;
t - Calculated pitch of points of support, in mm.

a. Where the stays are regularly pitched, see Fig. 6.3.2.1 (1).

$$t = \sqrt{a^2 + b^2}$$

b. Where the stays are irregularly pitched, or within the area enclosing the stays and flanges: When a circle is drawn through three points of support with a result of centre of the circle being situated inside the triangle formed by these three points, see Fig. 6.3.2.1 (2), t = d .

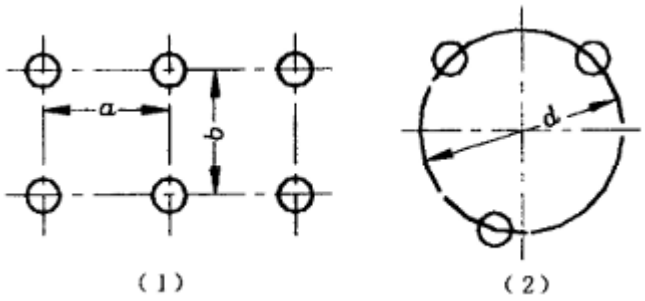

Fig. 6.3.2.1

Table 6.3.2.1
Constant C

No.	Method of support	Constant C②	
		Not exposed to flame	Exposed to flame
1	Flanged or fillet welding①	0.38	0.41
2	Stays with stiffening washers, washer diameter ≥ 0.67 of stay pitches	0.36	–
3	Stays with stiffening washers, washer diameter > 3.5 times the stay diameter	0.38	–
4	Stays, without stiffening washers, welding on both sides	0.40	0.44
5	Stays, without stiffening welding on one side	0.42	0.46
6	Stay tubes	0.46	0.51
7	Smoke tubes (in the tube nests)	0.55	0.61

Notes:
①See 6.3.3.1 (b), (c) and (d).
②Where a flat plate is provided with two or more methods of support, the constant C is to be taken as the mean of the values for the respective methods adopted.

6.3.2.2 The minimum thickness of the flat tube plates within the tube nests is to be determined by the following formula:

$$\delta = Ct\sqrt{\frac{p}{[\sigma]}} + 0.75 \quad \text{mm}$$

Where:
p - Design pressure, as specified in 6.1.3.1, in MPa;
[σ] – allowable stress, to be determined in accordance with 6.1.9.1, in N/mm^2;

C - Constant, to be selected in accordance with Table 6.3.2.1; for methods of support, see Fig. 6.3.4.2 (smoke tubes) and Fig. 6.3.5.2 (stay tubes);
t - Calculated pitch of points of support, in mm.

a. Where the stay tubes are welded to and the smoke tubes are expanded on the tube plates within the tube nests:
   t = mean pitch of stay tube supporting tube plates (equal to 1/4 the sum of the sides of a quadrangle formed by four tube centers).
b. Where the smoke tube are all welded to the tube plates and without stay tubes within the tubes nests:
   t = mean pitch of smoke tubes.

The minimum thickness of tube plates is in no case to be less than the following values:

- 10mm where the tubes are welded to the tubes plates;
- 14 mm where the tubes are expanded on the plates; for auxiliary boilers with a design pressure not exceeding 0.78 MPa, 12 mm may be accepted.

6.3.2.3 The minimum thickness δ of the flat tube plates in the wide water spaces between tube nests or around tube nests is to be determined by the following formulae:

a. For wide water spaces between tube nests:

$$\delta = Ct\sqrt{\frac{p}{[\sigma]}} + 0.75 \quad \text{mm}$$

b. For flat tube plates around tube nests:

$$\delta = Cd\sqrt{\frac{p}{[\sigma]}} + 0.75 \quad \text{mm}$$

Where:
p - Design pressure, as specified in 6.1.3.1, in MPa;
[σ] – allowable stress, to be determined in accordance with 6.1.9.1, in N/mm^2;
C - Constant, to be selected in accordance with Table 6.3.2.1; for method of support of stay tubes, see Fig. 6.3.5.2 (1) and (2);

$$t = \sqrt{a^2 + b^2}, \text{ mm};$$

a - horizontal pitch of stay tubes, in mm;
b - Vertical pitch of stay tubes, in mm;
d – Diameter of the maximum circle passing through three points of support of stay tubes and flanges, or of stay tubes and stays, or of stay tubes, stays and flanges, with a result of the centre of the circle being situated inside the triangle formed by these three points, in mm.

6.3.2.4 For tube plates the support afforded by the smoke tubes is not to be taken to extend beyond the line enclosing the outer surfaces of the tubes. If the distance between the outside of the wing row of smoke tubes and point of support of flanges is less than the width of margin of flat plate determined in accordance with 6.3.2.5, stay tubes may not be fitted in the wing row.

6.3.2.5 For a plate supported by the flues, furnaces or shell, the range from the point of support (see 6.3.3) to the width of margin b obtained by the following formula may be regarded as being supported by the flues, furnaces or shell to which the flat plate is attached:

$$b = \frac{C(\delta - 1)}{\sqrt{p}} \quad \text{mm}$$

Where:
p - design pressure, as specified in 6.1.3.1 , in MPa;
δ – thickness of a flat plates, in mm.
C =9.7 for plates not exposed to flame;
C =9.1 for plates exposed to flame.

Where an unflanged flat plate is welded directly to the flues, furnaces or shell and it is not practicable to effect the full penetration weld from both sides of the flat plate, the constant C used in the formula mentioned above is to be:
C = 7.5 for plates not exposed to flame;
C = 7.1 for plates exposed to flame.

6.3.2.6 In addition to the requirements of 6.3.2.2 and 6.3.2.3, the minimum thickness of combustion chamber tube plates under compression, due to the load on the top plates, is to be checked by the following formula:

$$\delta = \frac{pLt}{193(t - d)} \quad \text{mm}$$

Where:
p - Design pressure, as specified in 6.1.3.1, in MPa;
L—length at the top of combustion chamber along axis of the boilers, measured from the tube plate to the back chamber plate, in mm;
t - Horizontal pitch of smoke tubes, in mm;
d – Diameter of tube holes, in mm.

6.3.2.7 The minimum pitch t of the smoke tubes, secured in tube plate is to be determined by the following formula:

$$t = 1.125d + 12.5 \quad \text{mm}$$

Where:

d – Outside diameter of smoke tubes, in mm.

6.3.2.8 Where flat end plates are flanged for connection to the shell, the inside radius of flanging is to be not less than 1.75 times the thickness of plate, with a minimum of38 mm. Where tube plates or flat plates of combustion chambers are flanged for connection to the wrapper plates, the inside radius of flanging is to be not less than thickness of the plate, with a minimum of 25mm.

6.3.3 Point of support

6.3.3.1 The points of support of boiler flat plates are to comply with the following:

a. Long stays, short stays, stay tubes, welded-in smoke tubes (within the tube nests only) and flanges may be taken as points of support.
b. Points of support of flanges:
   - Where the inner radius of flange curvature does not exceed 2. 5 times the thickness of the plate, the commencement of the flange curvature is to be taken as the point of support.
   - Where the inner radius of flange curvature exceed 2.5 times the thickness of the plate, the point of support is to be taken at the position of 2.5 dines the plate thickness measured from the inner surface of the flange.
c. Where the furnace and front end plate are jointed by fillet welding, the outer surface of furnace is to be taken as a point of support.
d. Where smoke tubes are fitted by means of roller expansion, the flanges of manholes or sight—holes are not to be taken as points of support.

6.3.4 Plain smoke tubes

6.3.4.1 The minimum wall thickness of plain smoke tubes is to be determined by the following formula or is to be selected in accordance with Table 6.3.4.1, but in no case is to be less than 3 mm:

$$\delta = \frac{pd_1}{69} + 2 \qquad \text{mm}$$

Where:

p - Design pressure, as specified in 6.1.3.1, in MPa;

d_1- outside diameter of smoke tubes, in mm.

Table 6.3.4.1
Minimum wall thickness of smoke tubes

Outside diameter of tube mm	Wall thickness of tubes, mm				
	3	3.2	3.5	4.0	5.0
	Design pressure, MP				
38	1.76				
44.5	1.52	1.81			
51	1.32	1.57	2.01		
57	1.18	1.42	1.77		
63.5	1.08	1.28	1.62	2.16	
70	0.98	1.18	1.47	1.96	
76	0.88	1.08	1.32	1.77	
83	0.78	0.98	1.23	1.62	
89		0.88	1.13	1.52	2.3

6.3.4.2 The smoke tubes may be fitted by means of roller expansion or by welding to the plates. Where the smoke tubes are fitted by welding, they are to be in compliance with Fig. 6.3.4.2.

6.3.5 Stay tubes

6.3.5.1 The cross-sectional area F of welded-in stay tubes supporting tube plates is to be determined by the following formula, but in no case is the thickness of stay tubes to be less than 3.5 mm.

$$F = \frac{pA}{[\sigma]} \qquad \text{mm}^2$$

Where:
p - Design pressure, as specified in 6.1.3.1, in MPa;

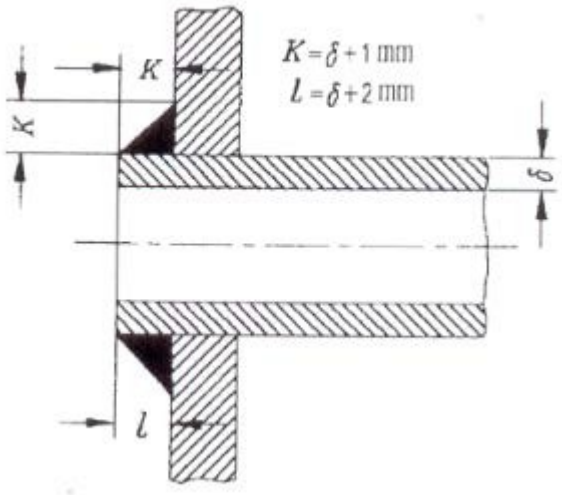

fig. 6.3.4.2 (Unit: mm)

A - area of tube plate supported by one stay tube, in mm;
[σ] – allowable stress, 67 N/mm^2;

6.3.5.2 The stay tubes are to be welded to the tube plates in accordance with Fig. 6.3.5.2(1) or (2)

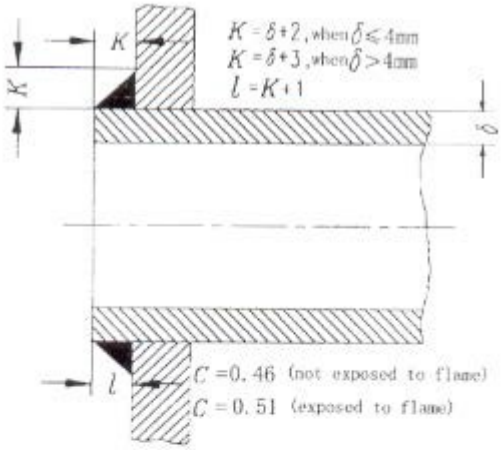

Fig. 6.3.5.2(1) (Unit: mm)

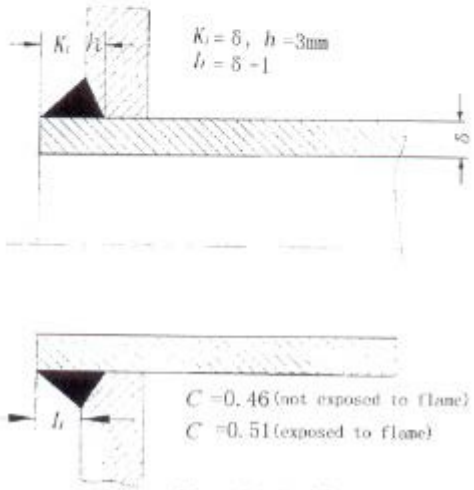

Fig. 6.3.5.2(2)

6.3.6 Stays

6.3.6.1 The minimum cross-sectional area F of welded-in stays supporting the flat plates is to be determined by the following formula:

$$F = \frac{pA}{[\sigma]} \qquad \text{mm}^2$$

Where:

p - Design pressure, as specified in 6.1.3.1, in MPa;

A - Maximum area of flat plate supported by one stay, in mm;

$[\sigma] = \frac{\sigma_b}{5.3}$ In N/mm^2, for long stays;

σ_b – specified tensile strength of materials;

[σ] =62, in N/mm^2, for short stays.

6.3.6.2 The structural details of welded-in stays are to comply with Figs. 6.3.6.2(1), (2) (for long stays) and (3) (for short stays).

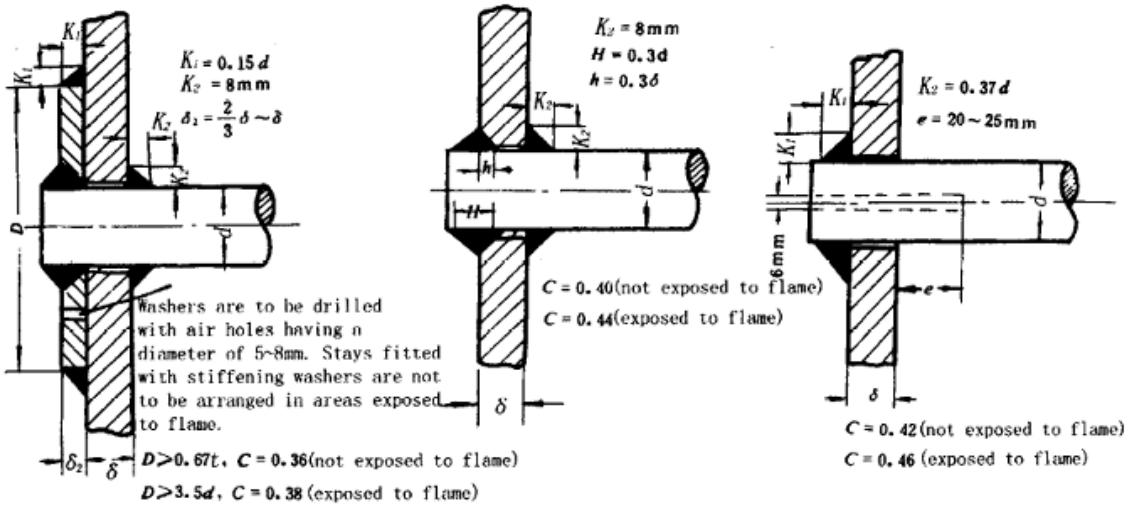

fig. 6.3.6.2

6.3.7 Furnaces

6.3.7.1 The minimum thickness of corrugated furnaces is to be determined by the following formula:

$$\delta = \frac{pD}{106} + 0.75 \qquad \text{mm}$$

Where:

p - Design pressure, as specified in 6.1.3.1, in MPa;

D- External diameter of furnace measured at the bottom of the corrugations, in mm.

6.3.7.2 The minimum thickness of plain furnaces or of the cylindrical bottoms of combustion chambers is to be determined by the following formula, whichever is the greater:

a.
$$\delta = \sqrt{\frac{pD(L + 610)}{10300}} + 0.75 \quad \text{mm;}$$

b.
$$\delta = \frac{KpD + 0.34L}{110} + 0.75 \quad \text{mm}$$

Where:

p - design pressure, as specified in 6.1.3.1 , in MPa;

L- maximum length between two points of support of the plain furnace, or for the cylindrical bottom of combustion chamber, in mm. The bisecting plane perpendicular to the axis of reinforcing ring, the commencement of flange curvature of rear tube plate and the fillet welded seam of the front tube plate are to be taken as the point of support for the measurement of the length for calculation of the furnaces;

D - external diameter of the plain fumace or twice the extemal radius of the cylindrical bottom of combustion chamber, in mm;

$$K = \frac{X}{[\sigma_s^T]};$$

X - specified minimum proof stress ((0.2), in N/mm^2, for carbon and carbon-manganese steel with a specified minimum tensile strength of 400 N/mm^2, at a temperature of 90°C above the saturated steam temperature corresponding to the design pressure;

[σ s ^{T}] – specified minimum proof stress (σ 0.2), in N/mm^2; for the steel actually used, at a temperature of
90°C above the saturated steam temperature corresponding to the pressure.

6.3.7.3 The thickness of both plain and corrugated furnaces is in no case to be less than 8 mm, nor greater than 21mm.

6.3.7.4 Where the sections of the plain furnace are jointed by reinforcing rings, the calculated length of each section is in general not to exceed 1000 mm. The reinforcing ring may be of two halves welded together, with an inner radius of curvature R = (3 ~ 4) δ (and a length of straight portion l= 2 δ (see Fig. 6.3.7.4).

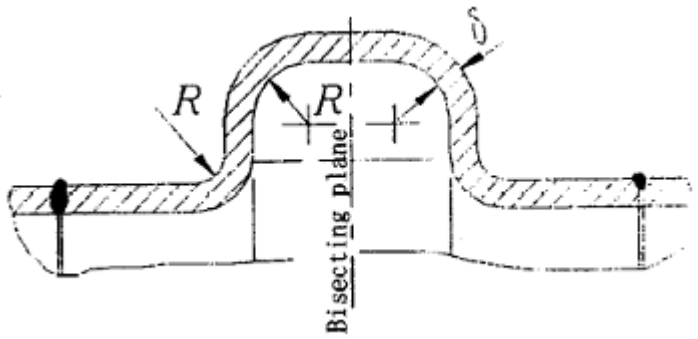

Fig. 6.3.7.4

6.3.8 Crown plates and girders of combustion chambers

6.3.8.1 The crown plate and welded-on girders of combustion chambers (see Fig. 6.3.8.1) are to comply with the following requirements:

a. The pitch t of the crown plate girders is in general not to be less than 10, (but not more than 25 δ).
b. The thickness of girders δ1 is not to be less than δ.
c. The side girders are to be arranged at a distance K equal to or less than the pitch t from the commencement of curvature of the wrapper plates.
d. The length of the girders is to be equal to the length of the combustion chamber L.
e. Girders are to have semi-circular scallops above the welded seams of the crown plate, or to have the welds made flush.
f. The crown plates of the wing combustion chambers are to be made inclined outward not less than 4°.

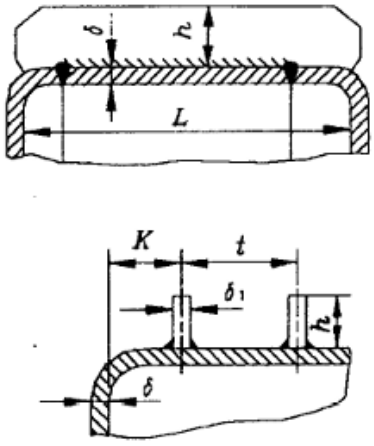

Fig. 6.3.3.1

6.3.8.2 The minimum thickness of the crown plate of combustion chambers stiffened by welded-on girders is to be determined by the following formula:

$$\delta = 0.56t\sqrt{\frac{p}{[\sigma]}} + 0.75 \quad \text{mm}$$

Where:

p - design pressure, as specified in 6.1.3.1 , in MPa;
t -pitch of girders, in mm;
[σ] – allowable stress, to be determined in accordance with 6.1.9.1, in N/mm^2;

6.3.8.3 The minimum deptl1 h of welded-on girders on the crown plate of the combustion chambers is to be determined by the following formula:

$$h = \frac{L}{0.68}\sqrt{\frac{pt}{\delta_1 \sigma_b}} \quad \text{mm}$$

Where:

p - Design pressure, as specified in 6.1.3.1, in MPa;
t -pitch of girders, in mm;
o_b – specified tensile strength of steel used for girders, in MPa;
L - Length at the top of combustion chamber measured internally from tube plate to back chamber plate, in mm;
δ 1 - thickness of girders, in mm.

6.4 VERTICAL AUXILIARY BOILERS

6.4.1 Cylindrical shell

6.4.1.1 The thickness of the cylindrical shell of vertical auxiliary boilers is to be determined in accordance with 6.2.1.1, but in no case is to be less than 5 mm.

6.4.2 Dished end plates subject to internal pressure

6.4.2.1 The minimum thickness of ellipsoidal, torispherical and hemispherical end plates without support subject to pressure on the concave side is to be determined in accordance with 6.2.5.1. The construction and openings in dished end plates are to comply with the requirements of 6.2.5.2 and 6.2.5.3.

6.4.2.2 The minimum thickness of torispherical end plates which are subject to pressure on the concave side and are supported by central uptakes is to be determined by the following formula:

$$\delta = \frac{pR}{1.3[\sigma]} + 0.75 \quad \text{mm}$$

Where:

p - Design pressure, as specified in 6.1.3.1, in MPa;
R - inside radius of curvature of the end plate, in mm;
[σ] – allowable stress, to be determined in accordance with 6.1.9.1, in N/mm^2;

6.4.3 Flat crowns

6.4.3.1 The minimum thickness of flat crown plates of boilers which are supported by central uptakes is to be determined by the following formula:

$$\delta = cd\sqrt{\frac{p}{[\sigma]}} + 0.75 \quad \text{mm}$$

Where:

p - Design pressure of boiler, as specified in 6.1.3.1, in MPa;

[σ] – allowable stress, to be determined in accordance with 6.1.9.1, in N/mm^2;

d - Diameter of the largest circle drawn through two points of support by flanges, in mm;

c - Constant:

c= 0.47, if the plates are not exposed to flame;

c= 0.51, if the plates are exposed to flame.

6.4.4 Tube plates

6.4.4.1 In addition to complying with the requirements of 6. 3.2.2 to 6.3.2.6, the minimum thickness of flat tube plates of vertical boilers having horizontal smoke tubes is to be determined by the following formula, whichever is the greater:

$$\delta = \frac{2pDt}{\sigma_b(t - d)} + 0.75 \quad \text{mm}$$

Where:

p - Design pressure of boiler, as specified in 6.1.3.1, in MPa;

D - Twice the radial distance measured from the centre of cylindrical shell to the centre of tubes holes in the outer row, in mm;

t - Vertical pitch of tubes, in mm;

d - Diameter of the tube holes, in mm;

o_b – specified tensile strength of tube plate used for girders, in N/mm^2;

6.4.5 Horizontal shelves of tube plates

6.4.5.1 For vertical boilers having horizontal smoke tubes, the horizontal shelves of the tube plates are to be supported by gussets as follows:

a. For the combustion chamber tube plate (rear tulle plate) the minimum number of gussets is to be:

   1 gusset when 255,000 < K ≤ 350,000;

   2 gussets when 350,000 < K ≤ 420,000;

   3 gussets when K > 420,000.

b. For the smoke box tube plate (front tube plate) the minimum number of gussets is to be:

   1 gusset when 250,000 < K ≤ 470,000;

2 gussets when K > 470,000;

Coefficient K is to be obtained from the following formula:

$$K = \frac{10.2ADp}{\delta}$$

Where:

A- Maximum horizontal dimension of the shelf from the inside of the shell plate to the outside of the tube plate, in mm;

D - Inside diameter of the boiler shell, in mm;

p - Design pressure, as specified in 6.1.3.1, in MPa;

δ - Thickness of tube plates, in mm.

6.4.5.2 The shell plates to which the sides ti the tube plates are connected are to be 1.6 mm thicker than that required in the formula applicable to shell plates. Where gussets are not fitted to the shelves, the strength of the parts of the circumferential seams at the top and bottom of these plates from the outside of one tube plate to the outside of the other is lo be sufficient to withstand the whole load on the boiler end with a factor of safety of not less than 4.5 related to the specified minimum tensile strength of the shell plate material.

6.4.5.3 The minimum thickness of the vertical furnace or internal uptake of the vertical boiler is to be determined by the following two formulae, whichever is the greater:

a. $$\delta = \sqrt{\frac{pD(L + 610)}{10300}} + C \quad \text{mm}$$

b. $$\delta = \frac{KpD + 0.34L}{110} + C \quad \text{mm}$$

Where:

p - Design pressure, as specified in 6.1.3.1, in MPa;

D – External diameter of the cylindrical furnace or internal uptake, in mm. Where the furnace is tapered, the diameter D is to be taken at the middle point of the calculated length L of the furnace;

L - Calculated length of the cylindrical furnace or internal uptake, in mm, i.e. the length between two points of substantial support. The lower end support of the furnace is a point connecting the boiler shell or U— shape ring and the upper end support is a point above the commencement of curvature of dished end by 0.4 H (H is the height of dished end). Where the furnace is supported by a circumferential row of regularly arranged stays with a diameter not less than 2.25 δ , and a pitch not exceeding 14 δ , these stays may be regarded as a point of support of calculated length;

C - Allowance:

C = 2 mm - for furnace;

C = 4mn - for internal uptake;

$$K = \frac{X}{[\sigma_S^T]};$$

Where X and [σ s ^{T}] are as defined in 6.3.7.2.

6.4.6 Hemispherical furnaces

6.4.6.1 The minimum thickness of unsupported hemispherical furnaces subject to pressure on the convex side is to be determined by the following formula:

$$\delta = \frac{KpR}{61} + 0.75 \quad \text{mm}$$

Where:
p - Design pressure, as specified in 6.1.3.1, in MPa;
R - outside radius of curvature of the furnace, in mm;

$$K = \frac{X}{[\sigma_S^T]};$$

Where X and [σ s ^{T}] are as defined in 6.3.7.2.

6.4.7 Torispherical furnaces subject to pressure on the convex side

6.4.7.1 The minimum thickness of vertical furnace end plates which are subject to pressure on the convex side and are supported by central uptakes (see Fig. 6.4.7.1) is to be determined by the following formula:

$$\delta = \frac{pR}{[\sigma]} + 0.75 \quad \text{mm}$$

Where:
p - Design pressure, as specified in 6.1.3.1, in MPa;
R - Outside radius of curvature of the end plates, in mm;
[σ] – allowable stress, to be determined in accordance with 6.1.9.1, in N/mm^2;

6.4.7.2 The minimum thickness of dished and flanged ends for vertical boiler furnaces that are subject to pressure on the convex side and are without support from stays, is to be determined by the following formula, but is in no case to be less than the thickness determined by 6.4.5.3:

$$\delta = \frac{KpR}{66} + 0.75 \quad \text{mm}$$

Where:
δ - The minimum thickness of flanged ends for boilers furnaces;

p - Design pressure, as specified in 6.1.3.1, in MPa;
R - Outside radius of curvature of the end plates, in mm;

$$K = \frac{X}{[\sigma_S^T]};$$

Where X and [σ s ^{T}] are as defined in 6.3.7.2.

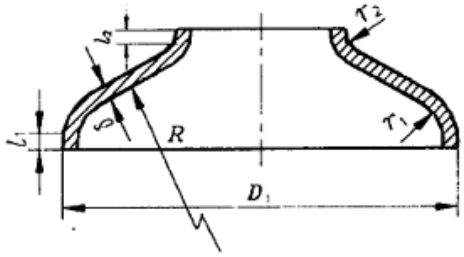

$R < D_1$;
$r_1 > 4\delta$, and > 50 mm;
$r_2 > 2\delta$, and > 25 mm;
l_1 and l_2, for welder construction $> 2\delta$

Fig. 6.4.7.1

6.4.8 Ogee rings

6.4.8.1 The minimum thickness of the ogee ring which connects the bottom of the furnace to the boiler shell and sustains the whole vertical load on the furnace (see Fig. 6.4.8. 1) is to be determined by the following formula:

$$\delta = \sqrt{\frac{pD(D-d)}{990}} + 0.75 \quad \text{mm}$$

Where:
p - Design pressure, as specified in 6.1.3.1, in MPa;
D - Internal diameter of boiler shell, in mm;
d - Outside diameter of the furnace where it connects the ogee ring, in mm.

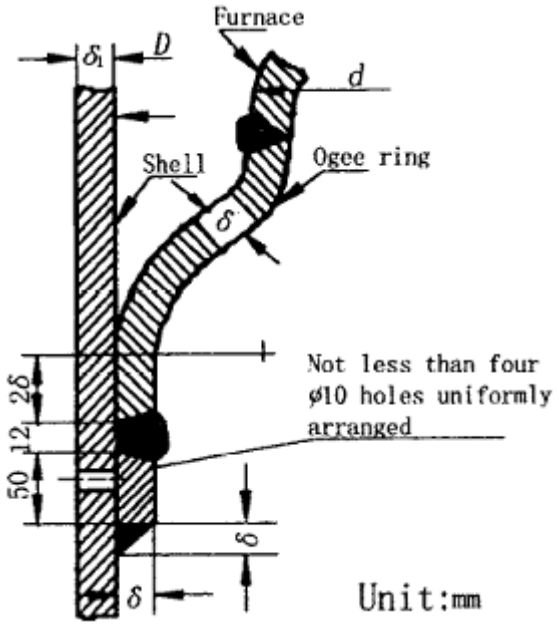

Fig. 6.4.8.1 (Unit: mm)

6.4.8.2 The minimum thickness of the U-shaped ring as shown in Fig. 6.4.8.2 is to be 10% thicker than that obtained from the formula as specified in 6.4.8.1.

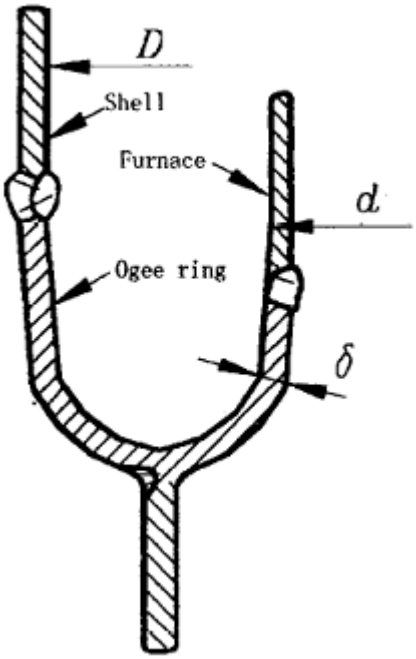

Fig. 6.4.8.2

6.5 BOILER MOUNTINGS AND FITTINGS

6.5.1 General requirements

6.5.1.1 Boiler mountings are to be connected to pads or stand-pipes with flanges. Mountings under 20 mm in diameter may be fitted with screws on pads or stand-pipes. Valves over 25 mm in diameter and the covers are to be secured by flange connections and valves having a diameter up to 25mm and the covers may be secured by screw connections with stoppers.

6.5.1.2 Valve bodies for boilers are to be made of steel or other equivalent material. For boilers having a design pressure not exceeding 0.98 MPa and steam temperature not exceeding 22O C, the valve bodies may be made of cast iron with the exception of blow-of valves.

6.5.1.3 Boiler mountings are to be located in positions easily accessible for maintenance and operation.

6.5.2 Feed check valves

6.5.2.1 Each boiler is to be provided with two independent feed check valves. But for small vertical boilers and exhaust—gas boilers for non-essential service, one feed check valve may be accepted.

6.5.2.2 Each feed check valve is to consist of a screw-down valve and a non-return valve, the lift of non-return valve is to be adjustable. The screw-down valve is to be attached direct to the boiler. The non-return valve is to be adjacent to the screw-down valve wherever practicable. For boilers fitted with economizers, the screw-down valve may be attached direct to the economizer which forms an integral part of the boiler.
For water tube boilers, the feed check valves are to be fitted with efficient gearing, whereby they can be satisfactorily operated from the stoke hold floor or other convenient position.

6.5.2.3 For water tube boilers at least one of the feed water systems is to be fitted with an approved feed water regulator whereby the water level in the boilers is controlled automatically.

6.5.3 Feed stand pipes and internal pipes

6.5.3.1 For boilers having a design pressure more than 2.75 MPa, the standpipes for feed inlets are to be designed with an internal pipe with the object of thermal stresses where temperature differences occur between the feed pipe and boiler shell.

6.5.3.2 The internal pipes for feed inlets are to be so arranged that no feed water impinges directly on the inner surfaces of the boiler shell exposed to hot gases.

6.5.4 Water level indicators and levels of the highest heating surfaces

6.5.4.1 Each boiler is to be fitted with at least two water gauges. For small water tube boilers, one water gauge and a set of not less than two cocks will be accepted.

6.5.4.2 The water gauges are to be readily accessible and so located that the water level is clearly visible. The lowest visible part of the glass water gauge is to be situated at the lowest safe working water level, but for water tube boilers, this level is to be situated at 50 mm below the lowest safe working water level.
In water tube boilers, where the steam and water drum exceeds 4 m in length and is fitted athwartships one water gauge is to be fitted near each end of the drum.

6.5.4.3 Boilers are to be provided with means indicating highest part of the heating surfaces, which are to be exposed outside of the boiler lagging and are to be adjacent to the glass water gauge.

6.5.4.4 The water gauges are to be of flat glass type. Glass tube water gauges with reliable protections may be used for boilers having a working pressure not exceeding 0.78 MPa.
Water gauge cocks are to be provided with operating gear if necessary and are to be so arranged that they can be easily operated without danger when the glass is damaged.

6.5.4.5 Water gauges are also to be provided with blow-off devices.

6.5.4.6 The water gauges may be fitted directly to the boiler shell or to columns, these columns are to be directly bolted to the boiler shells, or connected to the boiler by means of pipes. If they are connected by means of pipes, these pipes are to be fitted with cocks or screw-down valves with indicators showing whether the valves are open or shut. The internal diameter of the connecting pipes or columns is to be selected in accordance with Table 6.5.4.6.

The connecting pipes which communicate with the steam space are to be so arranged that there is no pocket or bend where accumulation of condensate water can lodge. Connecting pipes are not to pass through the uptake; if, however, this requirement cannot be complied with, they may pass through the uptake by means of a pipe tunnel with at least 50 mm air gap clear of the pipe all round.

Table 6.5.4.6
Internal diameter of connecting pipes and columns

Internal diameter of boiler shells, m	Internal diameter of connecting pipes, mm	Internal diameter of columns, mm
> 3	≥ 38	≥ 63
2.3 ~ 3	≥ 32	≥ 50
< 2.3	≥ 25	≥ 45

6.5.4.7 In general, the lowest water level in the boiler is to be as follows:

a. For water tube boilers, the lowest water level is to be not less than 100 mm above the highest part of heating surface. The downcomer tubes fitted on the steam drum are to be taken as the heating surface.
b. The lowest water level in horizontal smoke tube boilers is to be not less than 75 mm above the top of combustion chambers or smoke tubes, but for multi-return flow smoke tube boilers, this level may be suitably lowered.
c. The lowest water level in combined boilers is to be not less than 50 mm above the hot water tubes.
d. The height of lowest water level in vertical boilers having vertical smoke tubes is not to be less than half the length of smoke tubes.
e. The above mentioned heights of the lowest water level are to be still maintained when the ship has a list of 4°.

6.5.5 Safety valves

6.5.5.1 Boilers are to be fitted with not less than two safety valves. For small auxiliary boilers one safety valve may be accepted. For boilers with superheaters, at least one safety valve is to be fitted on the superheater.

Where a superheater is fitted as an integral part of a boiler, viz. there is no stop valve fitted between the superheater and the boiler, the area of superheater safety valve may be included in the total area of boiler safety valves; and where a stop valve is fitted between the superheater and the boiler, the area of superheater safety valve is not to be included in the area of boiler safety valves.
The area of the superheater safety valve is, in general, to be 5% of the total area of boiler safety valves required.

6.5.5.2 The diameter d of safety valve seatings is to be determined by the following formula

a. For saturated steam:

$$d = \sqrt{\frac{DA}{n(10.2p + 1)}} \quad \text{mm}$$

Where:
N - number of valves;
p - design pressure of boiler, as specified in 6.1.3.1 of this Chapter, in MPa;
D – minimum design evaporation of boiler, in kg/h;
A - coefficient, as given in Table 6.5.5.2.

Table 6.5.5.2
Coefficient A

Valve lift, mm	d/24	d/20	d/16	d/12	d/4
Coefficient A	27	23	18.5	14	6.6

b. For superheated steam:

$$d_1 = d\sqrt[4]{\frac{V_g}{V_B}}$$

Where:
d1 - diameter of valve seating for superheated steam, in mm;
d - diameter of valve seating as obtained in the calculation for saturated steam, in mm;
V_g - specific volume of superheated steam, in m^3/kg;
V_B - specific volume of saturated steam, in m^3/kg.

c. The diameter of full lift safety valves determined by the formula specified above is based on the area not including that of the guides or other obstructions. Then, for full lift safety valves with guides or other obstructions, the diameter of safety valves is to be determined by the total area of valve seating and guides or other obstructions.

d. In any case, the valve seating diameter of a safety valve is to be not greater than 100 mm, nor less than 25 mm.

6.5.5.3 Test of boiler safety valves

a. For smoke tube boilers with all stop valves closed and under full firing conditions for a duration of 15 min after the safety valve blows, the accumulation of pressure is not to exceed 10% of the design pressure;
b. For water tube boilers under the same conditions described above for a duration of 7 min after the safety valve blows, the accumulation of pressure is not to exceed 10% of the design pressure.

6.5.5.4 The construction of boiler safety valves is to comply with the following requirements

a. The safety valves are to be so locked or sealed that after setting to the WORKING pressure, they cannot be tampered with or overloaded in service, and that they are to be so deigned that in the event of fracture of springs they cannot lift out of their seats.
b. The waste steam is not to come into direct contact with the loading springs.
c. The safety valves are to be so secured to the shell that the passage are is to be not less than the total area of the safety valves in the case of full lift valves (lift≥d/4) and one-half of that area in the case of other safety valves.
d. Each safety valve chest is to be drained by a pipe led with a continuous fall to the bilge, and no valves or cocks are to be fitted to these drain pipes.
e. Safety valves are to be provided with easing gear which is to be operable at a safe position from the boiler or engine room platforms.
f. The spring casing of superheater safety valves are to be ventilated; or other arrangement provided to protect the spring from excessive temperature.
g. Two safety valves may be fitted in one chest.

6.5.5.5 The safety valves are to be fitted directly to the boiler shell and superheater.
The arrangements of full bore safety valves operated by pilot valves are to be subject to approval of the Society. The pipes connecting the pilot valves and main valves are to be of ample bore and wall thickness to minimize the possibility of obstruction and damage.

6.5.5.6 For full lift safety valves (lift ≥d/4), the passage area of the waste steam pipe is not to be less than twice the total area of safety valves, and for others type of safety valves. This passage area is not to be less than 1.1 times the total area of safety valves.

6.5.5.7 The setting pressure of boiler safety valves is to be 5% of the actual permissible working pressure, but not greater than the design pressure of the boiler.
The setting pressure of superheater safety valves is to be lower than that of the boiler safety valves.

6.5.6 Stop valves

6.5.6.1 The main and auxiliary stop valves are to be secured direct to the boiler shell. The number of auxiliary stop valves is to be minimized as far as practicable so as to minimize the unnecessary openings

in the shell. Where the superheater is integral with the boiler, the main stop valve is to be fitted to the outlet of the superheater.

6.5.6.2 Where two or more main boilers or auxiliary boilers for essential services are connected together the following requirements are to be complied with:

a. Essential services are to be capable of being supplied from at least two boilers.
b. Stop valves of self-closing or non-return type are to be fitted.

6.5.7 Blow-off and scum valves

6.5.7.1 Each boiler is to be fitted with blow-off valves and, if necessary, scum valves. Both blow-off and scum valves (if fitted) are to be secured direct to the boiler shell. Where it is not practicable to attach the blow-off valve direct to water tube boilers, the valve may be placed immediately outside the boiler casing with a steel pipe of substantial thickness fitted between the boiler and valve.

6.5.7.2 Scum valves and blow-off valves are to be not less than 20 mm in diameter, nor to exceed 40 mm.

6.5.7.3 The top edge of scum pans for the surface block-off is to be placed in the boiler within a range from 25 mm above the lowest water level to 25 mm below the working water level.
The number and arrangement of the scum pans are to be such as to ensure the possibility of blowing off the scum and oil from the entire evaporating surface.

6.5.8 Pressure gauges

6.5.8.1 Each boiler is to be fitted with at least two pressure gauges, one of which is to be placed at the front side of the boiler, in an easily seen and illuminated position. For small auxiliary boilers one pressure gauge may be accepted.

6.5.8.2 The connecting tube for each pressure gauge is to be provided with a joint (including valve or cock) for the check pressure gauge, but it may be dispensed with for small auxiliary boilers.

6.5.3.3 Pressure gauges are to be marked with a red line for indicating the working pressure of the boiler. The scale of pressure gauges is to be suitable for the hydraulic test pressure of boilers.

6.5.9 Sampling valve or cock

6.5.9.1 Each boiler is to be provided with a sampling valve or cock secured direct to the boiler shell. The valve or cock is not to be fitted on the water gauges standpipe.

6.5.10 Air cocks

6.5.10.1 An air valve or cock is to be fitted to the top of steam space of the boiler or drum and is to be, in general, 10 to 15 in diameter.

6.5.11 Superheater mountings

6.5.11.1 Superheaters are to be provided with the following mountings:

a. Safety valves as specified in 6.5.5.1 and 6.5.5.2;
b. Stop valves as specified in 6.5.6.1;
c. Drain valves;
d. Air cocks;
e. Thermometers.

6.6 PRESSURE VESSELS

6.6.1 Strength calculation

6.6.1.1 The strength calculation of pressure vessels is to comply with the strength calculation of relevant structure for water tube boilers, contained in 6.2; however, the allowable stresses used in the calculation are to be determined in accordance with 6.1.9.1. Where an accumulator works at frequently fluctuating working pressure, the allowable stress for its parts is to be appropriately lowered according to the fluctuation condition of pressure.

6.6.1.2 For the design pressure and allowable stress of pressure vessels, see 6.1.3.1 and 6.1.9.1.

6.6.1.3 The minimum thickness t of cylindrical shell of the pressure vessels is in no case to be not less than that determined by the following formula:

$$t \geqslant 3 + \frac{D_o}{1500} \quad \text{mm}$$

Where:
D_o - inside diameter of pressure vessels, in mm.

6.6.2 Fittings

6.6.2.1 For pressure vessels having a design pressure more than 0.98 MPa or working temperature exceeding 220°C the valve body is to be made of steel or other approved material.

6.6.2.2 Each pressure vessel is to be provided with the following fitting (for receivers, see 6.6.2.3):

a. Stop valves are to be fitted at the inlet and outlet of the pressure vessels, which are to be secured direct to the cylindrical shell as far as possible;
b. Drain devices including valves and internal pipes (where applicable);
c. Safety devices for preventing overpressure;
d. Pressure gauges indicating the medium pressure (where applicable);
e. Level indicators showing the working level of medium (where applicable) .

6.6.2.3 Each air receiver is to be provided with the following fittings:

a. Stop valves and pressure gauge as detailed in 6.6.2.2 (a) and (d);
b. Drain devices as specified in 6.6.2.2 (b), which are to be so arranged that they can drain completely the water from the lowest portion of the air receiver;
c. Safety valves. Where the air inlet pipe or the air compressor is fitted with a safety valve capable of preventing the pressure in the air receiver under charging conditions fium exceeding the design pressure, the safety valve on the air receiver may be dispensed with, provided that a fusible plug with a melting point approximately at 150 C and of a size capable of releasing the air in the event of fire is provided;
d. The capacity of safety valves are to be ensure that the air pressure is not to exceed 110% design pressure. Where outlet valves are closed, control valves are to be provided with safety valves.

6.7 PADS AND STANDPIPES

6.7.1 Pads

6.7.1.1 The pads for securing the mountings and fittings to boilers and pressure vessels are to be of sufficient thickness to permit the studs beings crewed into them with a length not less than the diameter of the studs without penetrating the pads. The pads and cylindrical shell are to be tightly fitted.

6.7.2 Standpipes

6.7.2.1 The minimum wall thickness of standpipes welded direct to the boilers and pressure vessels is to be not less than that determined by 6.2.9.1, making such additions as may be necessary on account of bending, static loads and vibration. The wall thickness, however, is to be not less than:

$$\delta = 0.04D + 2.5 \quad \text{mm}$$

Where:
D - Outside diameter oil the standpipes, in mm.
6.7.2.2 In general, the wall thickness of the standpipes need not exceed that of the shell.
Where a standpipe is connected by screwing, the thickness is to be measured at the root of the thread.

6.8 OPENINGS AND COMPENSATION

6.8.1 Cylindrical shells

6.8.1.1 Any openings in cylindrical shells, including manholes, hand-holes, openings for standpipes or connecting branches and tube holes, having diameters exceeding those obtained from the formula in 6.8.1.2, are to be reinforced in accordance with the requirements as specified in 6.8.1.3.

6.8.1.2 The maximum diameter d of any unreinforced openings is to be determined by the following formula, but in no case is to exceed 200 mm:

$$d = 8.1\sqrt[3]{D_1\delta(1-K)} \qquad \text{mm}$$

Where:

δ - actual thickness of cylindrical shell, in mm;
D1 - outside diameter of cylindrical shell, in mm;

$K = \dfrac{pD_1}{1.82[\sigma]\,\delta}$, but not more than 0.99;

p - design pressure, as specified in 6.1.3.1, in MPa;
[σ] – allowable stress, to be determined in accordance with 6.1.9.1, in N/mm^2;

For elliptical holes arranged with their major axes in longitudinal direction, the major axes are to be taken as the diameter of the opening; for elliptical holes arranged with their minor axes in longitudinal direction, the mean of the major and minor axes are to be taken as the diameter of the openings.

6.8.1.3 Openings in cylindrical shells larger than those permitted by 6.8.1.2 are to be reinforced by the methods shown in the following figures:
Fig. 6.3.1.3 (1): Reinforcement by stand-pipe or compensating ring; Fig. 6. 8.1. 3 (2): Reinforcement by compensating plate, and Fig. 6.8.1.3(3): Combined reinforcement by standpipe or compensating ring together with compensating plate. Reinforcement will be considered adequate when the effective compensating sectional area is equal to or more than the sectional area in way of the openings.

a. The effective sectional area, shown in Figs. 6.8.1.3(1) to (3), is to be taken respectively as the total of the following relevant sectional areas:
   - Surplus thickness of cylindrical shell multiplied by effective width, viz:

$$A_1 = (\delta - \delta_o)B, \qquad \text{in mm}^2;$$

   - Thickness of compensating plate multiplied by effective width, viz:

$$A_2 = \delta_2 B, \qquad \text{in mm}^2;$$

- Surplus thickness of standpipe or compensating ring multiplied by effective height, viz:

$$A_3 = (\delta_1 - \delta_3)h_1, \qquad \text{in mm}^2;$$

- Sectional area of that portion of the standpipe or compensating ring which projects inside the shell, viz:

$$A_4 = \delta_1 \times h_2, \qquad \text{in mm}^2.$$

b. Half the sectional area requiring compensating in way of the opening, viz:

$$\frac{d_1}{2} \times \delta_o \qquad \text{in mm}$$

c. The symbols used in sub — articles (a) and (b) above are defined as follows:

δ - actual thickness of the shell, in mm;

δ_o - thickness, in mm, to be determined in accordance with 6.2.1.1 where the strength factor φ of the shell is equal to 1

δ_1 - actual thickness of standpipes or compensating rings, in mm;

δ_2 – thickness of compensating plates, in mm;

δ_3 - thickness of standpipes, as determined by 6.2.9.1, in mm;

d_1 - inside diameter of standpipes or compensating rings,

$B = \sqrt{D_o\delta}$. but not more than 0.5 d, in mm;

$h_1 = 0.8\sqrt{d_1\delta_1}$, in mm; H_1 - effective height which projects inside the shell;

D_0 - inside diameter of cylindrical shell, in mm.

d. Where the material for the standpipe, compensating ring or compensating plate has an allowable stress lower than that of the shell, the effective compensating sectional area as prescribed in (a) is to be corrected by multiplying the following:

- Allowable stress of standpipe, or compensating ring or plate;
- Allowable stress of shell plate.

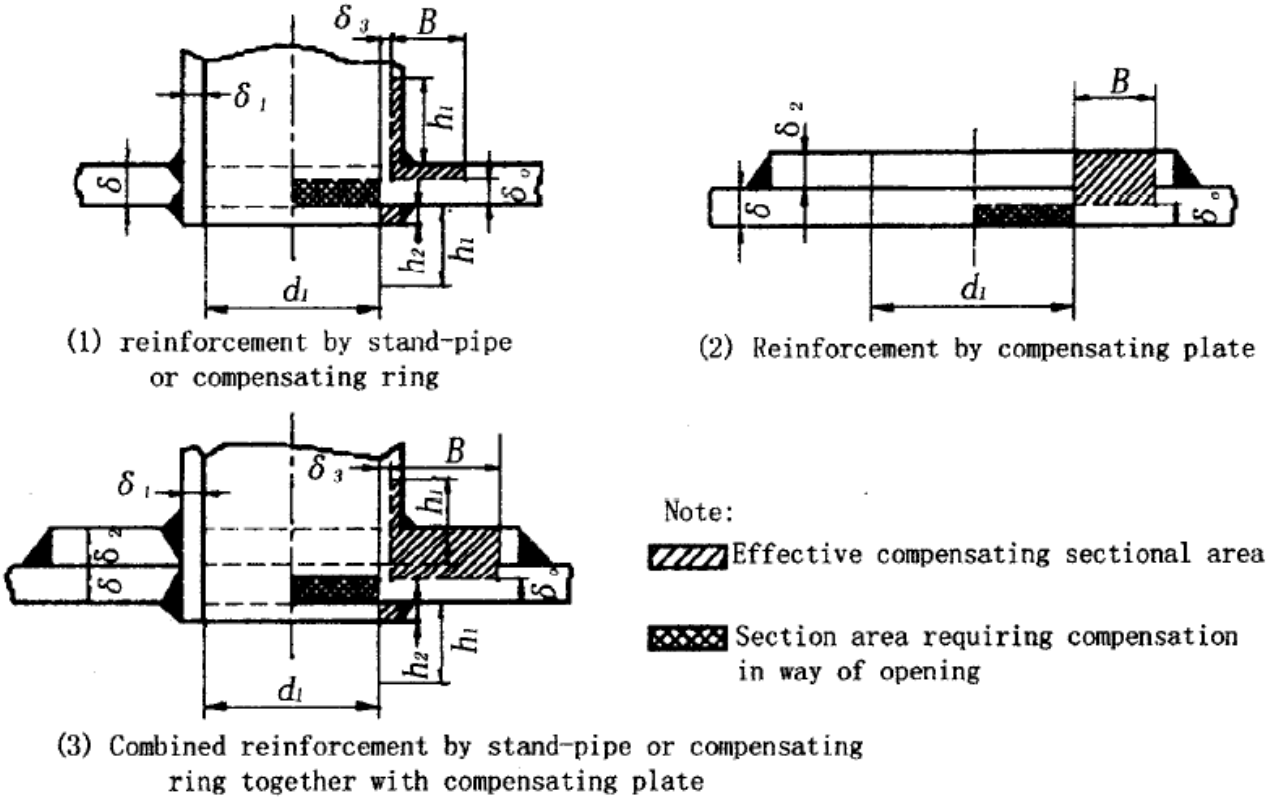

Fig. 6.11.1.3

6.8.2 Dished end plains

6.8.2.1 For openings with effective reinforcement in dished end plates, the opening factor d/ D1 δ is to be calculated as described in 6.2.5.1, but d in the formula is to be replaced by the equivalent diameter of opening, which is determined by the following formula:

$$d' = d - \frac{A}{\delta} \qquad \text{mm}$$

Where:

d - actual diameter of opening in dished end plate, in mm;

A - sectional area of the effective reinforcement, in mm^2, to be determined in accordance with 6.8.2.2. The reinforcement is to be so arranged that the distance from its outer edge to the outside edge of dished end plate is not less than 0.1D; the reinforcement is to be welded on the dished end plate in accordance with 6.8.2.3.

6.8.2.2 Openings in dished end plates may be reinforced with standpipe, compensating ring or compensating plate, or with compensating ring combined with compensating plate, see Fig. 6.8.2.2(a).

The effective compensating sectional area A is to be taken as the total of the following sectional area:

a. Thickness of compensating plate multiplied by effective width, in mm^2 viz:

$$A_1 = 2\delta_2 B;$$

b. Surplus thickness of standpipe or compensating ring multiplied by effective height, viz:

$$A_2 = 2(\delta_1 - \delta_3)h_1 ;$$

c. Thickness of standpipes or multiplied by effective height of that portion of standpipe or compensating ring which projects inside the end, viz:

$$A_3 = 2h_2\delta_1$$

Where:

B - effective width, $B \leq \sqrt{2R\delta}$ or $B \leq 0.5\ d$, in mm, the smaller value being taken;

R - inside radius of the spherical portion of the torispherical end, or inside radius of the meridian of the ellipse at the center of the opening for ellipsoidal end, in mm, to be determined by the following formula:

$$R = \frac{[a^4 - x^2(a^2 - b^2)]^{3/2}}{a^4 b} \quad \text{mm}$$

Where:

a, b and x are as shown in Fig. 6.8.2.2(1);

h1 — effecfive height, in mm;

$$h_1 = l + \delta + \delta_2 \text{ , in mm;}$$

h2 - effective height;

$$h_2 = l = \sqrt{d \cdot \delta_1} \text{ , in mm;}$$

δ - thickness of dished end plate, in mm;

$\delta 1$ - thickness of standpipe or compensating ring, in mm;

$\delta 2$ – thickness of compensating plates, in mm;

$\delta 3$ – minimum thickness as required in 6.2.1.1, in mm;

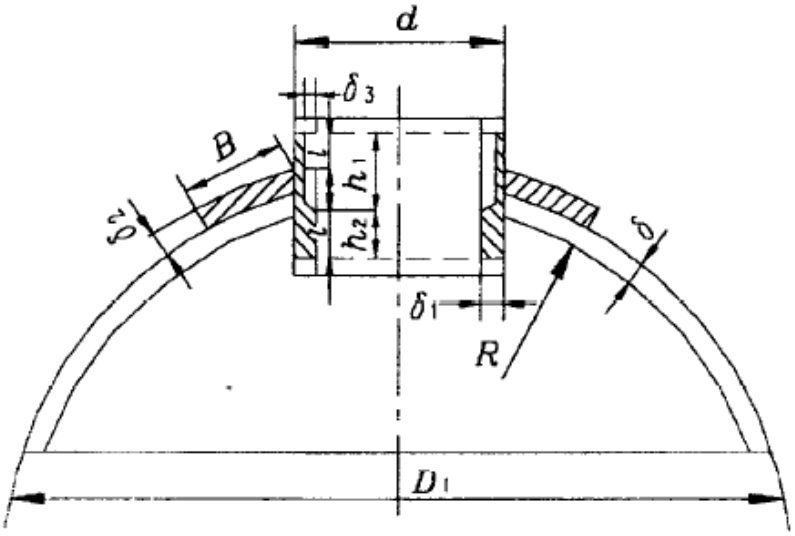

Note: ▨ Effective compensating sectional area

Fig. 6.8.2.2 (1)

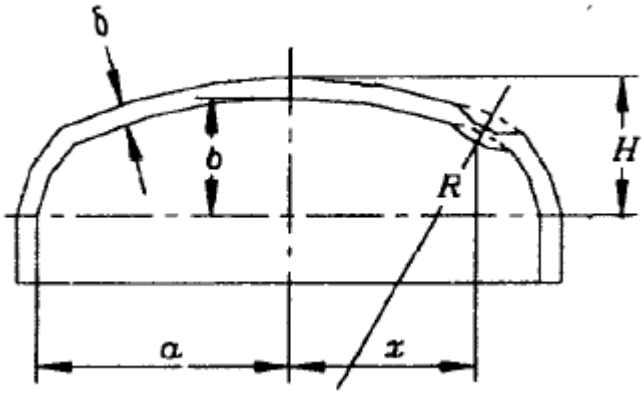

Fig. 6.8.2.2 (2)

Where the reinforcement material for openings in dished end plates has an allowable stress lower than that of the end plate, the effective sectional area of compensating material is to be corrected by multiplying the following:

- Allowable stress of compensating material;
- Allowable stress of dished end plate.

6.8.2.3 Acceptable welded construction methods for compensating the openings axe as shown in Fig. 6.8.2.3. Alternative methods of attachment by welding may be accepted provided that equivalent strength of welding is obtained.

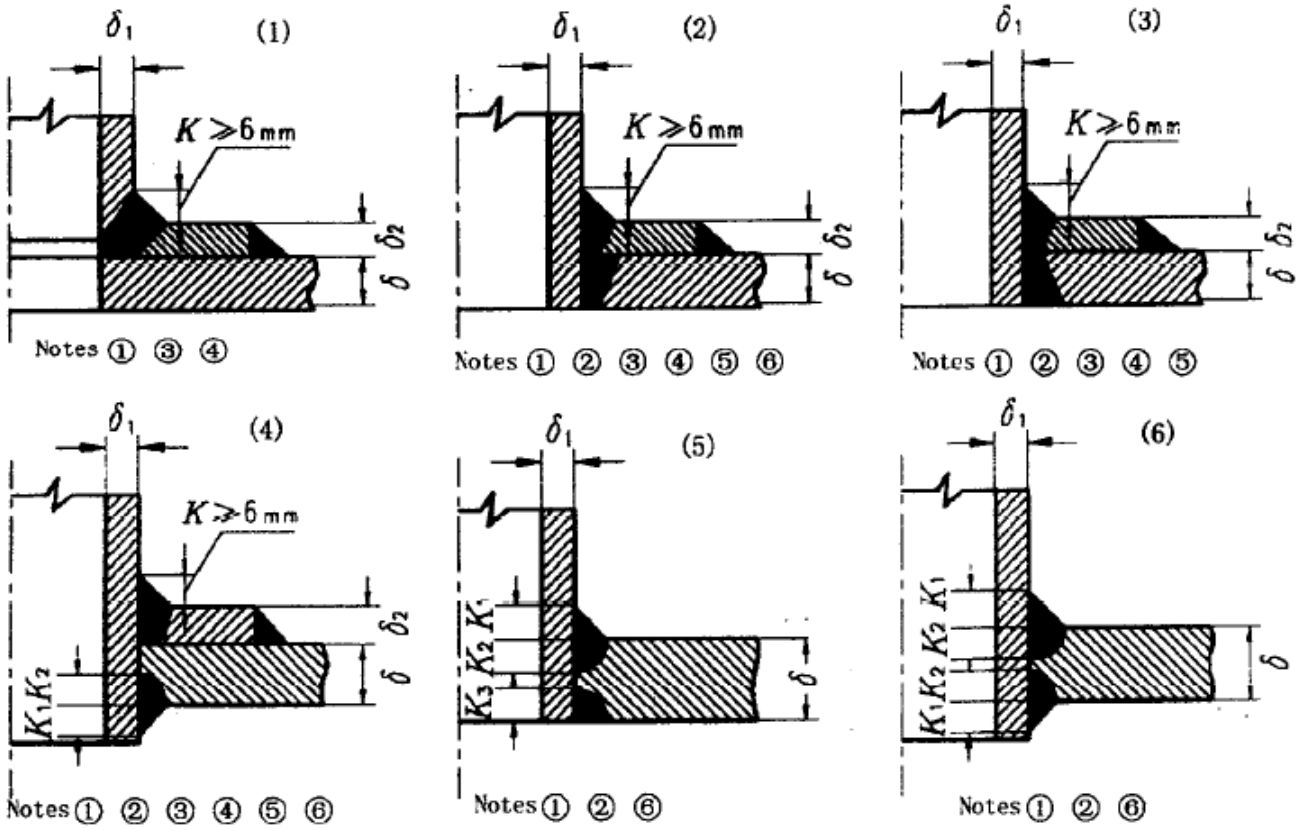

Fig. 6.8.2.3 (Ullt: um)

Notes: ① Where the thickness of standpipes or compensating rings is less than or equal to 10 mm, the ratio of δ_1/σ is in general not to be less than 1/5.

② There is to be a clearance between the inside of holes and outside of standpipes or compensating rings. This clearance is to be not more than 3 mm or $\delta_1/2$, whichever is the smaller.

③ There is to be no clearance between compensating plate and the shell plate.

④ Root of welds is to be gouged and a back sealing run is to be applied; where full penetration of welds can be ensured, the back sealing run may be dispensed with.

⑤ Care is to be taken that the welding stress is to be minimized as far as possible during welding.

⑥ Weld sizes:
$K \geq 6$mm;
$K_1 + K_2 = 1.5\delta_1$; but K_1 is not to be more than 14 mm or $\delta_1/2$, whichever is lesser;
$K_3 = \delta_1$.

6.9 CONSTRUCTION

6.9.1 Access arrangements

6.9.1.1 Boilers and pressure vessels are to be provided with manholes to facilitate internal examination and cleaning of the cylindrical shell and steam or water drums. In the case of boiler components and

pressure vessels such m cylindrical shells, headers, which are too small to permit entry, sufficient number of sight holes for these purposes is to be provided.
Manholes in cylindrical shells are preferably to have their minor axes arranged longitudinally.

6.9.1.2 Doors for manholes and sight holes are to be made of steel plate or steel forgings. Doors of the internal type are to be provided with spigots which have a clearance of not more than 2 mm all round.

6.9.1.3 Doors for manholes and sight holes are to have sufficient strength, and the minimum thickness of which is to be determined by the following formula:

$$\delta = 0.8ab\sqrt{\frac{P}{(a^2 + b^2)[\sigma]}} + 0.75 \quad \text{mm}$$

Where:
a – length of major axis of the door, in mm, measured from the center of jointing surface;
b – length of minor axis of the door, in mm, measured from the center of jointing surface;
P – design pressure, as specified in 6.1.3.1, in MPa;
[σ] – allowable stress, to be determined in accordance with 6.1.9.1, in N/mm^2;

6.9.2 Structure attachment

6.9.2.1 Where cylindrical shell consists of shell plates and/or tube plates which differ in thickness, the shell plates and/or tube plates are to be so butt welded that their centrelines form a continuous circle (see Fig.6.9.2.1). At the welded joint, the thicker plate is to be reduced in thickness by machining to a taper for a distance not less than two times the difference in the thickness.

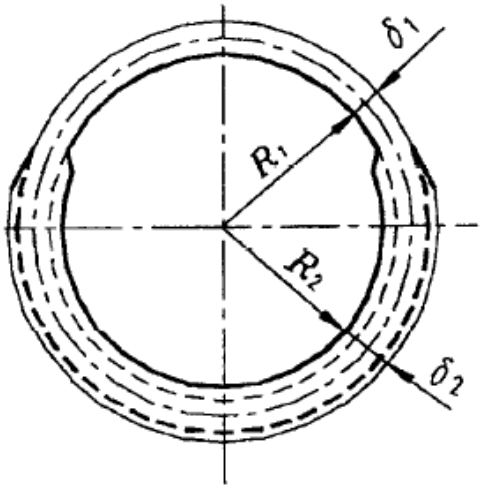

Fig. 6.9.2.1

6.9.2.2 For the attachment of torispherical or ellipsoidal ends to cylindrical shells, see Fig. 6.9.2.2. Where the difference in thickness is the same throughout the circumference, the thicker plate is to be reduced in thickness by machining to a taper for a distance not less than four times the offset, so that the two plates are of equal thickness at the position of the circumferential weld. A parallel portion may be provided between the end of the taper and the weld edge preparation; alternatively, if so desired, the width of the weld may be included as part of the smooth taper of the thicker plate.

The thickness of the plates at the position of the circumferential weld is not to be less than that required for cylindrical shell of seamless or welded construction, whichever is applicable, of the same diameter and material.

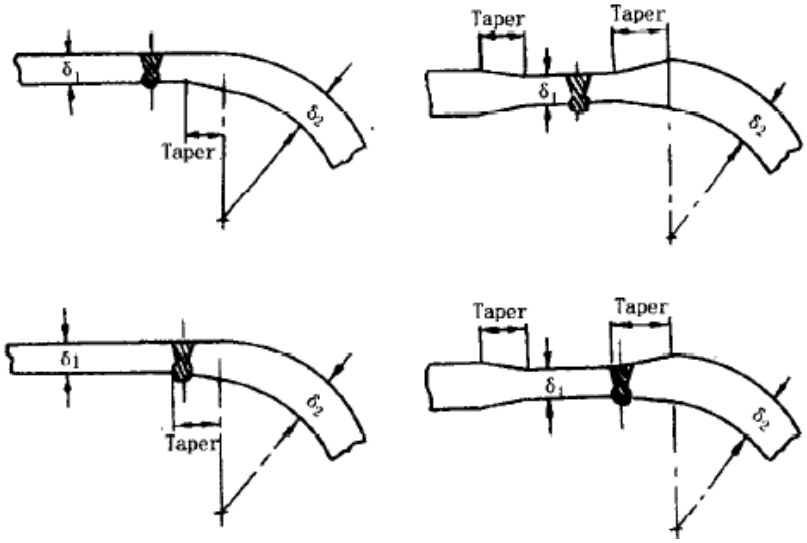

Fig. 6.9.2.2

6.9.2.3 Where hemispherical ends are butt welded to cylindrical shells, the thickness of the shell is to be tapered to that of the end, and the centre of the hemisphere is to be so located that the entire tapered portion of the shell and the butt weld are within the hemisphere, see Fig.6.9.2.3.
If the hemispherical end is provided with a parallel portion to be butt welded to the shell, the thickness of this portion is to be not less than that required for a seamless or welded shell.

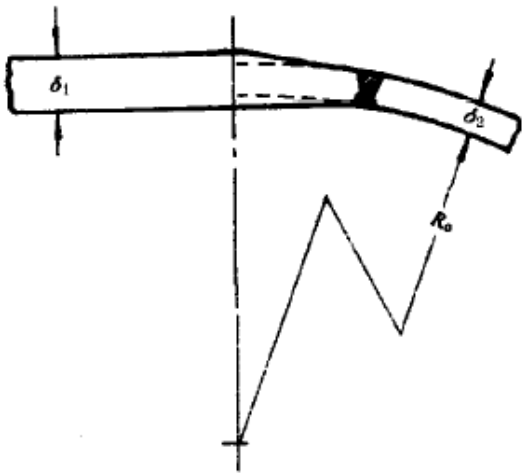

Fig. 6.9.2.3

The typical acceptable methods of attaching flat ends to cylindrical and rectangular headers are as shown in Fig. 6.9.2.4.

6.9.3 Fitting of tubes in water tube boilers

6.9.3.1 Where boiler tubes are expanded into the tube holes and are not normal to the tube plates, there is to be a neck having an effective depth h of not less than 13 mm (see Fig. 6.9.3.1). Where the tubes are practically normal to their plates, this parallel seating is no be not less than 9.5 mm in depth.

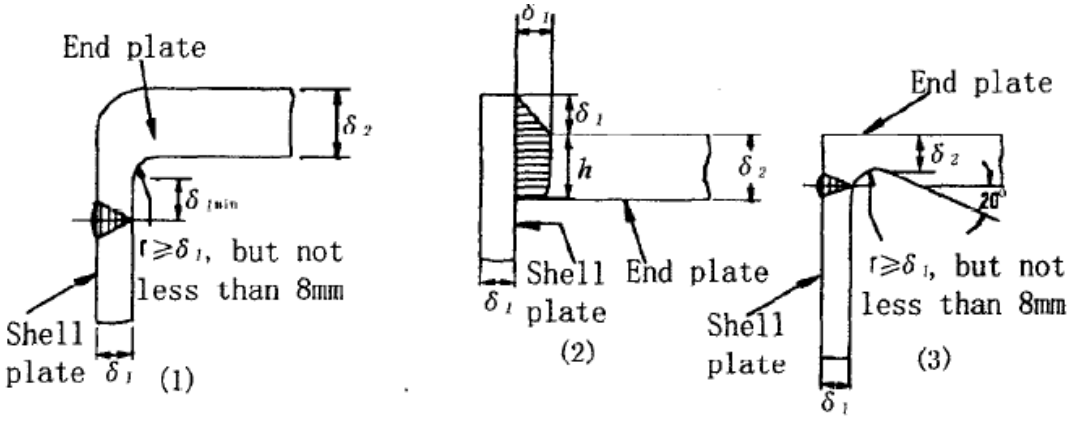

δ1=thickness of shell plate without holes or opening
δ2=thickness of the end plat
h =2δ1 δ2=1.5mm, whichever is smaller

Fig. 6.9.2.4

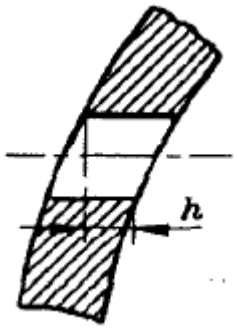

Fig. 6.9.3.1

6.9.3.2 For tubes expanded into the tube holes in cylindrical shell or headers, they are to project through the neck or belt of parallel seating by at least 6 mm, but not more than 16 mm. Where the tube ends are secured from drawing out by means of bell mouthing, the included angle of is lo be not less than 30°.

6.10 HYDRAULIC TESTS

6.10.1 General requirements

6.10.1.1 On completion of manufacture or assembly, boiler components and mountings and fittings and pressure vessels are to withstand hydraulic tests in accordance with Table 6. 10.1.1. But test pressure is not to exceed 90% yield force under test temperature.

6.10.1.2 Where all components of a boiler, such as drums, headers, etc. , have been satisfactorily tested to 1.5 times the design pressure $1.5\ p$ or $1.5\ p\ \frac{\sigma_s^{350}}{\sigma_s^T}$, on completion of fabrication including attachment of standpipes and pads by welding and heat treatment (but before drilling the tube holes) , the boiler may be tested only to 1.25 times the design pressure.

Table 6.10.1.1
Hydraulic test

No.	Item		Test pressure, Mpa	
			On completion of fabrication or assembly	After installation of mountings and fitings
1	Steam drums, water drums, headers, headers of economizers		1.5 p	–
2	Headers of superheaters	Working temperature ≤ 350 °c	1.5 p	–
		Working temperature > 350 °c	$1.5\ p\ \frac{\sigma^{350}}{\sigma T}$	–
3	Boiler, superheaters, economizers		1.5 p	1.25 p
4	Pressure vessels	Working temperature ≤ 350 °c	1.5 p	Air receives may be tested for air tightness under working pressure
		Working temperature > 350 °c	$1.5\ p\ \frac{\sigma^{350}}{\sigma T}$	
5	Smoke tubes and water tubes of boiler tubes of superheaters and economizers		2 p (after bending)	–
6	Superheated steam valve		2.5 p	1.5 p
7	Other boiler valves or mountings and fittings		2p	1.25 p

Notes:

1. P- design pressure, in MPa;
2. σ^{350}_{5}- specified minimum yield stress or 0.2 per cent proof stress of material at 350 °C, in N/mm^2
3. σ^{t}_{5}- specified minimum yield stress or 0.2 per cent proof stress of material at the working temperature t °C, in N/mm^2.

CHAPTER 7: STEAM TURBINES

7.1 GENERAL REQUIREMENTS

7.1.1 Application

7.1.1.1 The requirements of this Chapter are applicable to steam turbines for main propulsion and to those for essential auxiliary services.

7.1.2 Plans and documents

7.1.2.1 The following plans and documents of steam turbines are to be submitted to the Society for approval:

a. General arrangements;
b. Section of high-pressure and low-pressure cylinders;
c. Rotor and shaft bearings;
d. Nozzles and diaphragm;
e. Moving blades;
f. Quill shaft and couplings;
g. Arrangement of steam turbine pipings (including steam, lub-oil and condensation water piping and indicating the material, size and rated working pressure of pipes);
h. Technical performance of materials for principal component parts;
i. Strength calculations for principal component parts;
j. Welding specifications for principal component parts;
k. Plans and documents deemed necessary by the Society.

7.1.2.2 The following plans and documents of steam turbines are to be submitted to the Society for information:

a. Assembly sectional view of steam turbines;
b. Specifications of steam turbines.

7.1.3 Critical speed

7.1.3.1 The steam turbines are to be so designed as to ensure freedom from critical speeds within the operating speed range.

7.1.4 Astern turbines

7.1.4.1 Propulsion turbines are to be installed with astern turbines or incorporated with reversing gears, and the astern power and astern speed are to comply with the provisions contained in 1.1.6.

7.1.5 Indicators for movement

7.1.5.1 All propulsion turbines are to be equipped with devices indicating the axial position of the rotor relative to the Stator.

7.1.6 Testing of materials

7.1.6.1 The following parts are subject to in accordance with the relevant requirements for materials in the Rules for Materials and Welding by the Society:

a. Rotating parts such as rotors, discs, shafts, shrink rings, blades, toothed couplings and other dynamically loaded components as well as valve spindles and cones;
b. Stationary parts such as casings, diaphragms, nozzles and nozzle boxes, guide vanes, turbine casing bolts, bed frames and seats;
c. Pipes and pipe plates of condenser.

For small auxiliary turbines with inlet steam temperature of 250 C and below, the test of the material is to be limited only for the material of the blades and shafts.

7.1.7 Non-destructive testing

7.1.7.1 The scope of non-destructive testing for rotating and stationary parts of steam turbines is to be subject to agreement of the Society.

7.2 ROTORS

7.2.1 Construction

7.2.1.1 Smooth fillets are to be provided at abrupt changes of section of blade roots, discs, rotors and hubs. Sharp edges of Keyways and balancing holes are to be well rounded.

7.2.1.2 Any two among the wheel blade filling piece, balancing hole and key way of a disc are not to be arranged on the same radial direction. Where the discs are shrunk on the rotor, the angle subtended between the keyways of any two adjacent discs is to be not less than 9O°C.

7.2.1.3 Under any conditions, appropriate radial and axial clearances are to be provided between the parts and stationary parts, as well as in the gland sealing of turbines.

7.2.1.4 For propulsion turbines having astern stages, blades are to have sufficient strength to withstand the increased load arising from the counter-steam during reversing.

7.2.2 Testing

7.2.2.1 Where the inlet steam temperature exceeds 400 °C, the solid forged rotors or welded rotors of propulsion turbines are to be subjected to a thermal stability test after heat treatment and rough machining of the forging.

7.2.2.2 The vibration adjustment for the blading of prototype turbine is to be carried out so as to avoid resonance under service conditions and ensure safe running at any rating.

7.2.2.3 Rotors together with the half-coupling are to be dynamically balanced on completion of final assembly.

7.3 STATORS

7.3.1 Construction

7.3.1.1 Adequate provision is to be made for the relative thermal expansion of cylinders, diaphragms and nozzle boxes.

7.3.1.2 For the astern turbine, the built—in nozzle box or built-in casing is to be so arranged as to ensure the possibility of free axial or radial expansion relative to the turbine casing. The steam inlet pipe of the astern turbine is not to be rigidly connected to the casing.

7.3.1.3 All diaphragms of the first turbine of the same type are to be subjected to a maximum load test for checking their deflections.

7.3.1.4 Where carbon ring are used for outer gland sealing, they are to be capable of being repaired or renewed without opening the casing.

7.3.1.5 Turbine casings are to be provided with suitable drain devices.

7.3.2 Bearing

7.3.2.1 The journal bearings and thrust bearings of steam turbines are to be of plain type.

7.3.2.2 It is recommended that self-aligning types be adopted for both journal bearings and thrust bearing of propulsion turbines with high initial steam pressure and turbines for quick starting from cold condition. Alternatively, thrust bearing may be of such construction as to ensure uniform distribution of the thrust on the pads.

7.3.2.3 The oil well of the bearing seats is to be so constructed as to ensure that the lubricating oil system is capable of working free from troubles when the ship is under trim or list conditions as specified in 1.1.3.1. The temperature of the bearing lubricating oil is not to exceed 70°C.

7.4 SAFETY ARRANGEMENTS

7.4.1 Overspeed protective devices

7.4.1.1 An overspeed protective device is to be provided for main and auxiliary turbines so as to shutoff the steam supply automatically when the turbine speed exceeds the rated speed by more than 15%. Where two or more turbines are coupled to the same gear wheel set, only one overspeed protective device may be provided for all the turbines.

7.4.1.2 Arrangement is to be provided for shutting off the steam to the main turbines by suitable hand trip gear situated at the manoeuvring stand and at the turbine itself. Hand tripping for auxiliary turbines is to be arranged in the vicinity of the turbine overspeed protective device (The hand trip gear means any devices by hand manoeuvring, neglecting the executive action i.e. either by mechanical means or by external power menas).

7.4.2 Low pressure protective devices for lubricating oil

7.4.2.1 Main and auxiliary turbines are to be provided with lub-oil low pressure protective devices so as to shut-off the steam supply automatically when the lubricating oil pressure is lower than the specified value.

7.4.2.2 Main steam turbines are to fitted with a satisfactory emergency supply of lubricating oil which will come into use automatically when the pressure drops below a predetermined value. Suitable arrangement for cooling the bearings after stopping is to be required. For emergency supply system of oil, see 4.6.3.

7.4.3 Speed governors

7.4.3. 1 Turbines for propulsion generators and auxiliary turbines intended for driving electric generators are to be provided with reliable governors.

7.4.3.2 The governors of a turbine installation incorporating electric transmission, controllable pitch propeller or reverse gear is to be capable of controlling the speed under various conditions, without bringing the automatic overspeed protective device into action when full load is suddenly taken off.

7.4.3.3 The governors of auxiliary turbines intended for electric generators are to comply with the following:

a. Momentary variation not exceeding 10% of the rated speed and permanent variation not exceeding 5% of the rated speed when full load is suddenly taken off.
b. Momentary variation not exceeding 10% of the rated speed and permanent variation not exceeding 5% of the rated speed when 50% of the rated load of the generator is suddenly put on from no-load condition, followed by the remaining 50% load after an interval sufficient to restore the speed to steady state. The recovery time for the engine speed (i.e. the time for speed fluctuation ratio to return to 11%) is not to exceed 5s.

7.4.4 Protective devices for axial displacement

7.4.4.1 A protective device is to be provided for main turbines so as to shut oil the steam automatically when axial displacement of the turbine rotor is in excess of the specified value.

7.4.5 Gland sealing and condensate systems

7.4.5.1 In the arrangement of the gland sealing system, the pipes are to be made self-draining and every precautions to be taken against the possibility of condensate entering the turbines. In the air ejector re-circulating water system, the connection to the condenser is to be so located that water can not impinge on the rotor or casing.

7.4.6 Safety devices for manoeuvring

7.4.6.1 Screw-down non-return valves are to be fitted in steam bleeding-off pipes to prevent any steam from returning to the turbines.

7.4.6.2 Propulsion turbines are to be provided with power -driven turning gear. An interlock device is to be provided between turbine and turning gear to prevent the turbine from being started until the turning gear is disengaged.

7.4.6.3 An interlock device is to be provided for the ahead and astern manoeuvring valves of propulsion turbines. A screw-down valve is also required between those valves.

7.4.6.4 Efficient steam strainers are to be provided close to the inlets to ahead and astern high pressure turbines or alternatively at the inlets to manoeuvring valves.

7.4.7 Alarm devices

7.4.7.1 Propulsion turbines are to be fitted with alarm devices giving both audible and visible warnings when the vacuum in the condenser is lower than the specified value.

7.4.7.2 Sentinel relief valves are to be fitted at the exhaust ends or ducts of all main turbines. Safety valves are to be fitted to the turbines working under back pressure.

7.4.8 Emergency arrangements

7.4.8.1 In single screw ships fitted with multi-cylinder steam turbines, the arrangement is to be such as to ensure safe operation when the steam led to any one of the cylinders is cut off. For this purpose, means are to be provided either for supplying steam directly to the low-pressure turbine or for conveying the exhaust steam from the high or intermediate pressure turbine directly to the condenser. With a view to such emergency operation, suitable equipment is to be provided to prevent the permissible steam pressures and temperatures for the turbines and condenser from being exceeded.

7.5 HYDRAULIC TESIS

7.5.1 Test pressure

7.5.1.1 All components of turbines together with associated equipment are to be rested to the hydraulic pressures as given in Table 7.5.1.1.

Item	Test pressure, Mpa
Cylinders, steam receiver pipes and nozzle boxes	1.5 p but not less than 0.2
Manoeuvring valves	2.0 p -
Steam space of condensers	0.1
Cooling water space of condensers	1.5 p -

Note: p – Working pressure, in Mpa.

CHAPTER 8 GAS TURBINES

8.1 GENERAL REQUIREMENTS

8.1.1 Application

8.1.1.1 This Chapter applies to gas turbines for main propulsion and to those for essential and auxiliary services.

8.1.2 Rating

8.1.2.1 The rated output is defined as the maximum effective power developed by gas turbines for continuous running under standard ambient conditions of 15°C air temperature at compressor inlet, 0.1 MPa absolute pressure and, where applicable, a water temperature of 15°C.
The rated speed is defined as the speed corresponding to the rated output.

8.1.3 Correction curves

8.1.3.1 Correction curves are to be submitted by the manufacturers indicating the variation in major performance of gas turbines relating to ambient conditions.

8.1.4 Astern running

8.1.4.1 The astern power of the main propulsion gas turbines is to comply with the requirements of 1.1.6.

8.1.5 Miscellaneous

8.1.5.1 The construction and arrangement of the components and systems of gas turbines are to be in compliance with the provisions as specified in 1.1.3.1.

8.1.5.2 The welding of gas turbine components is to comply with the relevant provisions as specified in the Rules for Materials and Welding by the Society.

8.1.5.3 Automation systems of gas mm are to comply with the relevant provisions of this Volume.
8.1.5.4 Lubricating oil systems of gas turbines are to comply with the relevant provisions of 4.6.

8.1.6 Plans and documents

8.1.6.1 The following plans and documents of gas turbines are to be submitted to the Society for approval:

a. Sectional assembly of gas turbines and compressors;
b. Rotors, including blades;

c. Combustion chambers and heat exchangers;
d. Fuel oil systems;
e. Lubricating oil systems;
f. Details of high temperature characteristics of the materials, including (at the working temperatures) the associated creep rate and rupture strength for the designed service life (where applicable), fatigue strength, corrosion resistance and scaling properties. Particulars of heat treatment, including stress relief;
g. Calculations of the critical speeds;
h. Calculations of strength for major components;
i. Plans and documents deemed as necessary by the Society.

8.1.6.2 The following plans and documents of gas turbines are to be submitted to the Society for information:

a. Principal particulars of gas turbines, including ambient conditions temperature, air pressure and sea water temperature) , as well as curves the variation in performance with ambient conditions;
b. General section of gas turbines and compressors.

8.2 MATERIALS

8.2.1 General requirements

8.2.1.1 Materials used for the construction of gas turbine components are to comply with the relevant provisions as specified in the Rules for Materials and Welding by the Society. Where materials other than those mentioned above are used, special consideration will be taken by the Society.

8.2.2 High temperature properties

8.2.2.1 Gas turbine components working under high temperature are to have high temperature characteristics consistent with the working temperature (such as creep rate, rupture strength, fatigue strength, corrosion resistance and scaling properties).

8.2.3 Testing of materials

8.2.3.1 The following parts of gas turbines are to be in accordance with the relevant requirements for testing of materials in the Rules for Materials and Welding by the Society:

a. Shafts, turbine and wheel of compressor, guide vanes and blades;
b. Turbine and casing of compressor, combustion chambers and heat exchangers. For low-power gas turbines, materials of shafts, turbines and wheels of compressors are also to be subject to material tests.

8.2.4 Non-destructive testing

8.2.4.1 The scope of non—destructive testing for the components of transmitted powers and the pressed components is to be subject to agreement of the Society.

8.3 DESIGN AND CONSTRUCTION

8.3.1 General requirements

8.3.1.1 All pans of gas turbines, compressors, etc. , are to have clearances and fits appropriate to and consistent with their respective thermal expansion.

8.3.1.2 Gas turbine bearings are to be so disposed and supported that lubrication cannot be impaired by hot gas. Effective means are to be provided to prevent leakage oil coming into contact with hot pans.

8.3.2 Stress analysis

8.3.2.1 Stress analysis to each rotor including rotor discs, blades and shafts at maximum designed working condition is to be submitted by the manufacturers.

8.3.3 Vibration

8.3.3.1 Gas turbine and compressor rotor discs and blades are to be designed and manufactured to be free from undue vibration within the operating speed range. Calculations of the critical speed are to be submitted. Where critical speeds are found by calculation to occur within the operating speed range, vibration tests may be required by the Society.

8.3.4 Air inlet and exhaust gas systems

8.3.4.1 The air-inlet system is no be designed to minimize the entrance of harmful foreign matter into the compressors and gas turbines.

8.3.4.2 The arrangement of the turbine exhaust system is to be such as to prevent exhaust gas being drawn into the compressors.

8.3.5 Fuel and salt deposits

8.3.5.1 Where it is intended to burn non-distillate fuels forming harmful deposits, adequate provision is to be made for periodic removal of the deposits.

8.3.5.2 Means for preventing the accumulation of salt deposits in the compressors and turbines are to be provided.

8.3.6 Turning gear

8.3.6.1 Main gas turbines are to be equipped with turning gear interlocked with starting arrangements.

8.3.7 Starting system

8.3.7.1 The starting arrangements and starting air pipe systems are to comply with the relevant provisions as stated in 9.5, where applicable.

8.3.7.2 Gas turbines are to be provided with means for purging the burners prior to stoning the ignition cycle. Where means are provided for automatic starting, o purging program is to be included in the starting sequence.

8.3.8 Inspection openings

8.3.8.1 It is recommended that inspection openings be provided to permit inspection of rotors of the compressors and gas turbines and the inside of the burner with bore scope or other instrument without dismantling the gas turbines.

8.3.9 Instrumentation

8.3.9.1 Main propulsion gas turbines are to be provided with monitoring device fitted on the control platforms to display and/or record various principal parameters such as temperature, pressure, speed, etc.

8.3.9.2 Monitoring devices are at least to indicate the following:

a. Air pressure and temperature at compressor inlet;
b. Gas temperature at burner outlet;
c. Lubricating oil pressure and temperature;
d. Rotor speed.

8.3.10 Installation

8.3.10.1 Pipes and ducts connected to the turbine casings are to be so designed that no excessive thrust loads or moments are applied to the gas turbines.

8.3.10.2 Platform gratings and fittings in way of the supports are to be so arranged that free expansion of casing cannot be restricted.

8.3.11 Spare parts

8.3.11.1 The list of spare parts of the gas turbines is In be submitted to the Society for approval.

8.4 SAFETY ARRANGEMENTS

8.4.1 Overspeed protection

8.4.1.1 An overspeed protective device is to be provided near the burners for each shaft of gas turbines to shut off the fuel supply automatically in order to prevent dangerous overspeed. The overspeed protection values of main gas turbine and auxiliary gas turbine to drive an electric generator are to be 110% and 115% of the rated revolution respectively.

8.4.2 Speed governors

8.4.2.1 Where a main propulsion gas turbine incorporates a reverse gear, controllable pitch propeller, electric transmission gear or other clutches, a speed governor is to be fitted and is to be capable of controlling the speed of the power turbine without bringing the overspeed protective device into action when suddenly unloaded.

8.4.2.2 Where an auxiliary gas turbine is intended for driving an electric generator, a speed governor, independent of the overspeed protective device, is to he fitted and is to comply with the following requirements:
Momentary speed variation is not to exceed 10% of the rated speed, permanent speed variation is not to exceed 5% of the rated speed and the recovery time for the engine speed (i.e. the time for the speed fluctuation ratio to return to ± 1%) is not to exceed 5s when full load is suddenly taken off.
The permanent speed variations of A.C. generating sets intended for parallel operations are to be equal as far as possible.

8.4.3 Low oil pressure protection

8.4.3.1 Gas turbines are to be provided with low oil pressure protective devices capable of shutting off the fuel supply automatically when lubricating oil pressure is lower than the specified value.

8.4.4 High gas temperature alarm

8.4.4.1 Gas turbines are to be provided with high gas temperature alarm devices to give warnings when the gas temperature at burner outlet exceeds the permissible value.

8.4.5 Flame failure protection

8.4.5.1 Gas turbines are to be provided with flame failure protective devices capable of shutting off the fuel supply automatically in the event of flame failure in the combustion chambers.

8.4.6 High temperature protection for bearing

8.4.6.1 The bearings of gas turbines are to be provided with high temperature protection to give warning when the lub oil is going up excessively.

8.4.7 Hand trip gear

8.4.7.1 Hand trip gear for shutting of the fuel supply in an emergency is to be provided at the manoeuvring platform of the gas turbines.

8.4.8 Temperature controls

8.4.8.1 The following turbine services are to be fitted with automatic temperature controls so as to maintainsteady state conditions throughout the normal operating range of the main gas turbine:

a. Lubricating oil supply;
b. Oil fuel supply (or automatic control of oil fuel viscosity as alternative);
c. Exhaust gas.

8.5 TEST

8.5.1 Balance test

8.5.1.1 For compressors and gas turbines, all rotors as finished-bladed and complete with half-coupling are to be dynamically balanced.

8.5.2 Hydraulic tests

8.5.2.1 All casings (including compressor casings) are to be tested to a hydraulic pressure equal to 1.5 times the maximum working pressure. For test purposes, if necessary, the casings may be subdivided with temporary diaphragms for distribution of test pressure.
Where hydraulic tests can not be carried out, the manufacturers are to submit, for approval by the Society, alternative proposals for determining the soundness of the component.

8.5.2.2 Heat exchangers and intercoolers are to be tested to a hydraulic pressure equal to 1.5 times the maximum working pressure on each side.

8.5.3 Overspeed tests

8.5.3.1 Before installation, all complete rotors of the gas turbines are at least to be tested for 5 min at 15% above the rated speed.

8.5.4 Ship trials

8.5.4.1 Gas turbines are to be subject to shop trials and the manufacturer's test programme is to be submitted to the Society for approval.

CHAPTER 9 DIESEL ENGINES

9.1 GENERAL REQUIREMENTS

9.1.1 Applications

9.1.1.1 The design, construction, installation as well as and trial of marine diesel engines, including main propulsion diesel engines and diesel for generators or other essential auxiliary equipment, are to comply with the requirements of this Chapter.

9.1.2 Rating

9.1.2.1 The rated output is defined as the maximum continuous output developed by diesel engines (i.e. the maximum shaft power for which the machinery is to be classed) based on the ambient conditions specified in 1.1.3.2 or 1.1.3.3. The rated speed is defined as the speed corresponding to the rated output.

9.1.2.2 Main engines are to be capable of running for an hour at an overload of 10% above the rated output. Diesel engines for generators are to comply with the requirements of 1.1.7.1.

9.1.3 Astern

9.1.3.1 Main engines are to be reversible except those coupled with variable pitch propellers, reversing gears or electric propulsion generators.

9.1.3.2 Ships main engines are to be capable of developing sufficient aster-n power to ensure proper control of the ship under normal conditions. The astern power of reversible main engines (determined by bench test) is to be not less than 70% of the rated output for ahead running.

9.1.4 Plans and documents

9.1.4.1 The following plans and documents are to be submitted to the Society for approval:

a. Crankshaft (including shaft coupling bolts, balance weights and their bolts) and thrust shaft;
b. Schematic layout of engine control system;
c. Arrangement of important piping system (including fuel oil, lubz-ics.ti.ng oil, cooling, exhaust gas, pneumatic and hydraulic systems) and their protection and alarm devices;
d. Arrangement of foundation bolts (including foundation bolts, chocks and stoppers);
e. Structural detail and arrangement of crankcase relief valves;
f. Sectional of assembly of exhaust gas turbochargers;
g. Main technical particulars of diesel engines: engine cycle, type, rating, rated speed, number of cylinders, bore, stroke, Vee angel (if applicable), firing order, maximum combustion pressure, mean indicated pressure and mean effective pressure;
h. For bedplates, crankcases, frames and cylinder block of welded construction, details of welds of all parts, welding technical characteristics and welding material and technology, heat treatment etc. are to be indicated.

9.1.4.2 The following plans and documents are to be submitted to the Society for information:

a. Diesel engine transverse cross-section and longitudinal section;
b. Cast bedplate , crankcase and frame;
c. Cylinder cover, jacket and block;
d. Piston assembly;
e. Tie rods;
f. Connecting rod, piston rod and crosshead assembly;
g. Camshaft gearing;
h. Vibration dampers and torque compensators;
i. Diesel engine operation instructions;
j. Other plans and documents deemed necessary by the Society.

9.1.5 Minimum steady speed

9.1.5.1 Main engines are to have good performance at low speeds. In general, the minimum steady speed of low-speed engines is not to exceed 30% of the rated speed, and that of medium speed and high speed engines, not to exceed 4O% and 45% respectively.

9.1.6 Manoeuvring

9.1.6.1 The time required for reversing main engines is not to exceed 15s. The time for reversal is defined as, when the main engine is running at the minimum steady speed, the time elapsed from the beginning of manoeuvring till starting of running in the opposite direction.

9.1.6.2 An index indicating the Ahead and Astern directions of the handle or the hand-wheel is to be fitted to the control station. As a common practice, for navigating the ship ahead, the handle is no be pushed forward, or the hand- wheel is to be turned clockwise.

9.1.6.3 An indicator showing the crankshaft rotational direction is to be fitted to the control station. but it may be dispensed with provided the tachometer is of a dual-rotation type.

9.1.6.4 For ships propelled by multiple engines geared on one shaft or more, a centralized control station for main engines is to be installed in the engine room, and is to be provided with interlocking device ensuring the correct operation sequence of main engines, clutches, etc. while manoeuvring. If the centralized control station is installed on the bridge, another control gear is to be provided in the engine room and is to be interlocked with that on the bridge.

9.1.6.5 Devices for quickly cutting 011' oil fuel supply or other effective arrangements for emergency stopping are to be provided near the main engine control station.

9.1.7 Interlocking of turning gear

9.1.7.1 A safety interlocking device is to be fitted between the turning gear and the starting arrangement of the main engine.

9.1.8 Instrumentation

9.1.8.1 Tachometers and other necessary measuring instruments are to be fitted to diesel engines. Restricted speed ranges are to be marked red on tachometers.

9.1.9 Vibration and alignment

9.1.9.1 The vibration and alignment of marine diesel engine shafting are to comply with the relevant requirements as specified in Chapter 12.

9.1.10 Bench lest

9.1.10.1 Bench test of diesel engines is to he carried out in accordance with the relevant requirements of the Rules and the test programs agreed by the Society.

9.2 MATERIALS

9.2.1 Materials

9.2.1.1 The specified tensile strength of forgings and castings for crankshafts is in general to be selected within the following limits, and the materials used are to comply with the relevant requirements contained in the Rules for Material and Welding by the Society:

a. Carbon and carbon-manganese steel 400 ~ 600 N/mm^2;
b. Alloy steel 600 ~1000 N/mm^2;

c. Nodular graphite cast iron 490 ~ 780 N/mm^2.

9.2.1.2 Where it is proposed to use alloy steel forgings for crankshafts, details of the chemical composition, heat treatment and mechanical properties are to be submitted for approval by the Society.

9.2.2 Material test

9.2.2.1 The materials of the following components of diesel engines (based on cylinder bore D are to be tested in accordance with the relevant requirements of the Rules for Materials and Welding by the Society:

a. Crankshaft (All D);
b. Crankshaft coupling flange (non-integral) and bolts for main propulsion engines (D > 400 mm) ;
c. Steel piston crowns, piston rods and connecting rods (D > 400 mm);
d. Connecting rods(All D);
e. Crosshead (D >400);
f. Cylinder liner-steel parts (D > 300 mm);
g. Cylinder cover-steel (D > 300 mm);
h. Steel casting and steel forgings for welded bedplates (All D);
i. Plates for welded bedplates, frames, crankcases, and entablatures (All D) ;
j. Tie rods (All D);
k. Turbo-charger, shaft and rotor including blades(D > 300 mm);
l. Bolts and studs for cylinder covers, crossheads, main bearings, connecting rod bearings (D > 300 mm);
m. Steel gear wheels for camshaft drives (D > 400mm).

9.2.3 Non-destructive tests

9.2.3.1 The following components of diesel engines (based on cylinder bore D) are to be subject to magnetic particle or liquid penetrant test in accordance with the requirements of the Rules for Materials and Welding by the Society, at positions mutually agreed by the Surveyor and the manufacturer:

a. Crankshaft (AII D);
b. Steel piston crowns piston rods(D>400mm);
c. Connecting rods (All D);
d. Cylinder cover-steel (D > 400 mm);
e. Steel casting for welded bedplates (All D);
f. Tie rods (D>400 mm);
g. Bolts and studs for cylinder covers, crossheads, main bearings, connecting rod bearings (D > 400 mm);
h. Steel gear wheels for camshaft drives (D>400mm).

9.2.3.2 The following components of diesel engines (based on cylinder bore D) are to be subject to ultrasonic test in accordance mm the requirements of the Rules for Materials and Welding by the Society, and the certificates of compliance are to be issued by the manufacturer.

a. Crankshaft (All D);
b. Steel piston crowns (All D);
c. Piston rod (D>400mm);
d. Cylinder cover-steel (All D);
e. Connecting rods(D>400mm);
f. Steel casting for welded bedplates (All D).

9.2.3.3 For important structural components of diesel engines, the welds are to be examined by an established method of inspection.

9.2.3.4 After being examined by the above method, where the soundness of the diesel engine components is still in doubt, the Surveyor may require a non-destructive test be carried out with some other recognized methods of detection.

9.3 DESIGN AND CONSTRUCTION

9.3.1 Design

9.3.1.1 Design and construction of diesel engines are to comply with relevant requirements of ambient condition, properties and availability stipulated in 1.1.

9.3.1.2 Reference may be made to Guidelines for Evaluation of Strength of Diesel Engine Crankshaft by the Society in calculating crankshafts of diesel engines.

9.3.2 Structure

9.3.2.1 Frames and bedplates of diesel engines are to be stress-relieved. In the case of welded structure, they are to meet, furthermore, the relevant requirements in the Rules for Materials and Welding by the Society.

9.3.2.2 Bedplates of main engines are to be reasonably rigid, and are to be securely fixed to the engines seatings of reasonable rigidity by means of holding down bolts or bolts and chocks.
When holding-down bolts only are used, the number of fitting bolts is in general not to be less than 15% of the total number.

9.3.2.3 Where the engine is installed on resilient mountings, linear vibration (steady state and transient) is not to exceed the limiting values prescribed by the engine manufacturer nor those permitted by the

resilient mountings. And any misalignment arising from such vibrations is not to impose excessive loading on machinery components within the system.

9.3.3 Indicator valves

9.3.3.1 An indicator valve is to be fitted to each cylinder cover of diesel engines having cylinder bore over 200 mm.

9.3.4 Cylinder Safety valve

9.3.4.1 A safety valve is to be fitted to each cylinder cover of diesel engines having cylinder bore over 230 mm. The valve is to be set at a pressure not more than 1.40 times the maximum combustion pressure and is to be so arranged that personal injury will not be caused by the outburst gas. Consideration will be given to the replacement of the relief valve by an efficient warning device of overpressure in the cylinder.

9.3.5 Crankcases and relief valves

9.3.5.1 Crankcases and their doors are to be of robust construction and the doors are to be securely fastened so that they will not be readily displaced by an explosion.

9.3.5.2 The relief valves of crankcases are to be type-approved. They are to be so constructed as to close quickly after the outflow of gas and to prevent any inrush of air thereafter. The valves are to be designed to open at a pressure not greater than 0.02 MPa.

9.3.5.3 The discharge from the relief valves is to be shielded by flame guard or flame trap to minimize the possibility of danger and damage arising from the emission of flame.

9.3.5.4 In engines having cylinders not exceeding 200 mm bore and having a crankcase gross volume not exceeding 0. 6 m3, relief valves may be omitted.

9.3.5.5 In engines having cylinders exceeding 200 mm but not exceeding 250 mm bore, at least one relief valve is to be fitted near respectively each end of crankcase and an additional relief valve is to be fitted near the middle of the engine, where crank throws exceed eight.

9.3.5.6 In engine having cylinders exceeding 250 mm but not exceeding 300 mm bore, at least one relief valve is to be fitted in way of each alternate crank throw with a minimum of two valves. Relief valves are to be arranged from each end, where the cranks are of odd number.

9.3.5.7 In engines having cylinders exceeding 300 mm bore at least one relief valve is to be fitted in way of each main crank throw.

9.3.5.8 Additional relief valves are to be fitted for separate spaces on the crankcase, such as gear or chain cases for camshaft or similar drives, when the gross volume of such spaces exceeds 0.6 m^3.

9.3.5.9 The combined free area of the crankcase relief valves fitted on an engine is to be not less than 115 cm^2 per m^3 of the volume of the crankcase. The free area of each relief valve is to be not less than 45 cm^2.

9.3.5.10 In determining the volume of the crankcase for the purpose of calculating the combined free area of the crankcase relief valves, the volume of the stationary parts within the crankcase may be deducted from the total internal volume of the crankcase.

9.3.6 Vent pipes

9.3.6.1 Ventilation of crankcase, and any arrangement which could produce a flow of external air into the crankcase, are in principle avoided. Vent pipes, where provided, are to be as small as practicable.

9.3.6.2 Interconnection of ventilating pipes of two or more engines is not permitted nor that of oil drain pipes of crankcase.

9.3.6.3 If provision is made for the extraction of gases from within the crankcase, e.g. for smoke detection purpose, the vacuum within the crankcase is not to exceed 25 mm of water column.

9.3.7 Alarms

9.3.7.1 Smoke detectors or engine bearing temperature control system or other equivalent device in the crankcase are recommended as means for reducing the explosion hazard.

9.3.8 Warning notice

9.3.8.1 A warning notice is to be fitted in a prominent position, preferably on a crankcase door on each side of the engine, or alternatively at the engine room control station. This warning notice is to specify that whenever overheating is suspected in the crankcase, the crankcase doors or sight holes are not to be opened until a reasonable time has elapsed after stopping the engine, sufficient to permit adequate cooling within the crankcase.

9.4 PIPING SYSTEMS

9.4.1 Lubricating oil systems

9.4.1.1 The lubricating oil systems of diesel engines are to be so designed and installed as to maintain operation when the ship is under a list up to 15° or trim up to that as given in 1.1.3.1.

9.4.1.2 Diesel engines greater than 37 kW are to be provided with an audible and visible alarm device giving an indication of failure of lub oil systems.

9.4.2 Cooling water systems

9.4.2.1 For large low-speed diesel engine having oil-cooled or Water-cooled pistons, a thermometer and a device for observing the circulation of cooling oil or cooling water are to be fitted to each outlet pipe led from the inside of the piston.

9.4.2.2 Cooling water systems of diesel engines are to be provided with alarm devices for indicating the excess temperature.

9.4.3 Oil fuel systems

9.4.3.1 For cargo ships of 500 gross tonnage and over constructed after I July 2002 and engaged on international voyages and all passenger ships, external high-pressure fuel delivery lines between the high-pressure fuel pumps and fuel injectors are to be protected with a jacketed piping system capable of containing fuel from a high-pressure line failure. A jacketed pipe incorporates an outer pipe into which the high-pressure fuel pipe is placed, forming a permanent assembly. The jacketed piping system is to include a means for collection of leakages and arrangements are to be provided with an alarm in case of a fuel line failure.
For cargo ships less than 500 gross tonnage engaged on international voyages and ships engaged on non-international voyages, where the cylinder bore of main and auxiliary diesel engines is 250 mm and above, the fuel injection piping is to be effectively secured and shielded so as to prevent oil fuel or oil fuel mist from reaching a source of ignition on the engine or its surroundings. Suitable drainage arrangements are to be made/‘or draining any oil fuel leakage.
Where diesel engine is intended for unattended machinery space service, the high pressure oil fuel injection piping is to be shielded irrespective of the bore of the cylinders. Where flexible hose is used for shielding, it is to be of an approved type.
When in return pipe the pulsation of pressure with peak to peak values exceeds 2 MPa, this pipe is to be shielded.

9.4.3.2 Where, on V-type engines, the fuel system is located between the rows of cylinders, suitable shielding and drainage ducts for leaking fuel are to be provided.

9.4.3.3 Leaking fuel is to be safely drained away at zero excess pressure. Care is to be taken to ensure that leaking fuel cannot become mixed with the engine lubricating oil.

9.4.3.4 Where the engine is installed on elastic mountings, the flexible joints approved by the Society are to be fitted in Way of connecting between diesel engine and fuel oil supply pipes.

9.4.4 Exhaust systems

9.4.4.1 An instrument for measuring the exhaust gas temperature is to be fitted to each cylinder of diesel engines with cylinder bore 200 mm and over.

9.4.4.2 The exhaust pipes of diesel engines are to be provided with effective silencers.

9.4.4.3 Each diesel engine is to have a separate exhaust pipe. Where the exhausts of two or more engines are led to a common silencer or exhaust gas-heated boiler or economizer, an isolating device is to be provided in each exhaust pipe.

9.4.4.4 Where the exhaust is led overboard near the Waterline, means are to be provided to prevent water from being siphoned back to the diesel engine.

9.4.4.5 For alternatively fired furnaces of boilers using exhaust gases and oil fuel, the exhaust gas inlet pipe is to be provided with an isolating device and interlocking arrangements whereby oil fuel can only be supplied to the burners when the isolating device is closed to the boiler.

9.4.5 Starting air pipe system

9.4.5.1 The air discharge pipe from the compressors is to be led direct to the starting air receivers. Provision is to be made for intercepting and draining oil and water in the air discharge for which purpose a separator or filter is to be fitted in the discharge pipe between compressors and receivers.

9.4.5.2 The starting air pipe system from receivers to main and auxiliary engines is to be entirely separate from the compressor discharge pipe system.

9.4.5.3 Starting air manifold of large low-speed diesel engines is to be fitted with safety valves, which are to be set at a pressure of 1.1 times the maximum starting air pressure. The starting air piping system is to be protected against the effects of explosions by providing an isolating non-return valve or equivalent at the starting air supply to each engine.

9.4.5.4 In diesel engines having cylinders exceeding 230 mm flame arresters are to be fitted in the starting air systems, such devices are to be fitted at the starting valves on each cylinder for direct reversing engines and at the supply inlet to the starting air manifold for non-reversing engines.

9.5 STARTING ARRANGEMENTS

9.5.1 Initial starting arrangements

9.5.1.1 Equipment for starting the main and auxiliary engines is to be provided so that the necessary initial charge of starting air or initial electric power can be developed on board ship without external aid . If for this purpose an emergency air compressor or electric generator is required, these units are to be power driven by hand starting oil engine or steam engine, except in the case of small installations, where a hand-operated compressor of approved capacity may be accepted. Alternatively, other devices of approved type may he accepted as a means of providing the initial start.

9.5.2 Air charging equipment

9.5.2.1 Where main propulsion engines are arranged for starting by compressed air, at least two sets of air charging equipment are to be provided, one of which is to be independent of the main propulsion unit. The total capacity of these equipment is to be capable of charging the air receivers within 1 h from atmospheric pressure, to the pressure sufficient for the number of consecutive starts required in 9.5.3.2.

9.5.2.2 Pressure gauges and safety valves are to be fitted to air compressors. The safety valves are to be set at a pressure not more than 1.1 times the working pressure. Casings of the cooling water space of compressed air coolers are to be provided with relief valves or bursting discs.

9.5.2.3 Relief valves are to be fitted to the crankcase of air compressors when the crankcase has a volume exceeding 0.6 m^3.

9.5.3 Air receivers and their capacity

9.5.3.1 The design and construction of air receivers are to comply with the relevant requirements contained in 6.6.

9.5.3.2 Main engines arranged for starting are to be provided with at least two air receivers. The total capacity of the air receivers is to be sufficient to provide, without replenishment, not less than twelve consecutive starts alternately in the ahead and astern directions, of each main engine if of the reversible type in cold condition, and not less than six consecutive starts if of the non-reversible type. However, the total capacity of starting air may be suitably reduced for ships having more than two main engines.

9.5.3.3 The air receivers are to be so fitted with drain arrangement as to permit effective drainage when the ship is under normal inclination conditions.

9.5.4 Electric starting installations

9.5.4.1 Where the main engine is arranged for electric starting, two separate batteries are to be fitted. The arrangement is to be such that the batteries cannot be connected in parallel. Each battery is to be capable of starting the main engine when in cold and ready to start conditions. The combined capacity of the batteries is to be sufficient without recharging to provide within 30min the number of starts of main engines are required in 9.5.3.2 in case of air starting.

9.5.4.2 Electric starting arrangements for auxiliary engines are to have two separate batteries or may be supplied by separate circuits from the main engine batteries when such are provided. In the case of a single auxiliary engine only one battery may be required. The capacity of the batteries for starting the auxiliary engines is to be sufficient for at least three starts for each engine.

9.5.4.3 The stoning batteries are to be used for starting and the engines own monitoring purposes only. Provisions are to be made to maintain continuously the stored energy at all times.

9.5.5 Starting arrangements for emergency generating sets

9.5.5.1 The prime mover of emergency generating sets is to be capable of being started in cold condition at a temperature of 0°C. If this is impracticable, or if lower temperatures are likely to be encountered, an accessory heating arrangement approved by the Society may be fitted so as to ensure low-temperature starting of the emergency generating sets.

9.5.5.2 Each emergency generating set arranged to be automatically started is to be equipped with starting devices approved by the Society with a stored energy capability of at least three consecutive starts. And a second source of energy is to be provided for an additional three starts within 30 min unless manual starting can be demonstrated to be effective.

9.5.5.3 The stored energy is to be maintained at all times as follows:

a. Electrical and hydraulic starting systems are to be maintained from the emergency switchboard.
b. Compressed air starting system may be maintained by the main or auxiliary compressed air receivers through a suitable non-return valve or by an emergency air compressor which, if, electrically driven, is supplied from the emergency switchboard.
c. All of these starting, charging and energy storing devices are no be located in the emergency generator space; these devices are not to be used for any purpose other than the operation of the emergency generating set. This does not preclude the supply to the air receiver of the emergency generating set from the main or auxiliary compressed air system through the non-return valve fitted in the emergency generator space.

9.5.5.4 Where automatic starting is not required, manual starting is permissible, such as manual cranking, inertia starts, manually charged hydraulic accumulators, or powder charge cartridges, where they can be

demonstrated as being effective. When manual starting is not practicable, the requirements of 9.5.5.2 and 9.5.5.3 are to be complied with except that starting may be manually initiated.

9.5.5.5 The emergency generator used to restore operation from the dead ship condition is to comply with the provisions of 1.1.8.1.

9.6 SCAVENGING AND SUPERCHARGING ARRANGEMENTS

9.6.1 Lubricating oil systems

9.6.1.1 The lubricating oil system of exhaust gas turbochargers may be separate from, or in common with, that of the main engine. If lubricating oil pumps are not directly driven by turbochargers, an independent standby lubricating oil pump is to be provided. And in addition, large low-speed diesel engines are to be provided with lubricating oil gravity tanks for emergency. Lubricating oil systems are to be arranged according to the requirements of 1.1.3.1.

9.6.2 Instruments and alarm devices

9.6.2.1 Exhaust gas turbochargers are in general to be provided with instruments for measuring the temperature of exhaust gas before the turbine, the pressure of supercharged air, the temperature of lubricating oil, etc., and are also to be provided with pressure gauges and alarm devices for excess temperature and low pressure of the lubricating oil except those lubricating oil system which are directly driven by the turbochargers.

9.6.2.2 Consideration is to be given to the construction of turbo chargers so that the rotor speed may be measured.

9.6.3 Air filters and silencers

9.6.3.1 Turbochargers are to be fitted with inlet air filters and silencers.

9.6.4 Rotor shaft locking devices

9.6.4.1 Turbocharger rotor shafts are to be provided with locking devices If not, by-pass connections or other suitable devices are to be fitted to the pipes before and after the turbines to ensure the normal operation of main engines in case of turbocharger breakdown.

9.6.5 Critical speeds

9.6.5.1 Critical speeds of the turbocharger rotor are to be determined by calculation. In the case of rigid rotor shafts, critical speeds are not to be less than 1.3 times the rated speed.

9.6.6 Rotors and rotor shafts

9.6.6.1 Where motor shafts are of welded construction, they are to meet the relevant requirements in the Rules for Materials and Welding by the Society.

9.6.6.2 After assembly, rotors are to be dynamically balanced.

9.6.7 Protection

9.6.7.1 For two-stroke loop—scavenged and cross-scavenged diesel engines, grids or other suitable device: are to be fitted before turbine nozzles to prevent broken piston rings from entering into the turbine casings.

9.6.7.2 It is undesirable to connect vent pipes of crankcase with turbocharger inlets. Otherwise, effective oil vapour separating devices are to be fitted before the turbocharger inlets.

9.6.8 Emergency blowers

9 .6.8.1 Two-stroke turbocharged diesel engines not equipped with scavenge pumps are to be provided with independent emergency blowers, except that the scavenging air systems arranged in series are available.

9.6.9 Relief valves of scavenging air receivers and fire extinguishing devices

9.6.9.1 Scavenging air receivers of two-stroke diesel engines are to be fitted with relief valves as well as devices for removing dirty oil and condensate. Relief valves are to be set generally at a pressure not more than 1.1 times the maximum scavenging air pressure.

9.6.9.2 Crosshead type engine scavenge spaces in open connection with cylinders are to be provided with approved fire arrangements which are to be independent of the fire system of the engine room.

9.7 GOVERNORS AND OVERSPEED PROTECTIVE DEVICES

9.7.1 Governors

9.7.1.1 Main engines are to be provided with efficient governors to ensure that the speed of main engines does not exceed the rated speed by more than 15%.

9.7.1.2 When electronic speed governors of main engines form part of are remote control system, they are to comply with the following conditions:

a. If lack of power to the governor may cause major and sudden changes in the present speed and direction of thrust of the propeller, back up power supply is to be provided.

b. Local control of the engines is always to be possible even in the case of failure in any part of the automatic or remote control systems, and to this purpose, from the local control position it is to be possible to disconnect the remote signal.

9.7.2 Overspeed protective devices

9.7.2.1 For each main engine developing 220kW and above which drives a controllable pitch propeller or which can be declutched from the transmission shafting, an overspeed protective device is to be provided in addition to the governor prescribed in 9.7.1.1, so as to prevent the rated speed from being exceeded by more than 20 %.

9.7.3 Governors for generating sets

9.7.3.1 Diesel engines intended for driving electric generators are to be provided with governors, which are to meet the following requirements:
They will prevent transient frequency variations in the electrical network in excess of ± 0% of the rated frequency with a recovery time to steady state conditions not exceeding 5 seconds, when the maximum electrical step load is switched on or off When the rated load is suddenly taken off a transient speed variation in excess of 10% of the rated speed may be acceptable, provided this does not cause the intervention of the overspeed device as required by 9.7.3.2 permanent variation in speed is not to exceed 5% of the rated speed.
When 50% of the rated load is suddenly applied from no-load condition, followed by the remaining 50% load after an interval sufficient to restore the speed to steady state, the momentary variation in speed is not to exceed 10% of the rated speed, and permanent variation in speed is not to exceed 5% of the rated speed. The recovery time for the engine speed (i.e. the time for speed fluctuation ratio to return to i 1%) is not to exceed 5 s. When a four-stroke diesel engine with high supercharge is used as the prime mover for driving generator, application of electrical load in more than 2 load steps can be permitted in its governing characteristics tests (see Fig.9.7.3.l). Thus, the power necessary electrical installations being automatically switched on after block-out and the sequence in which it is connected are to be sufficiently considered in designing the load of ship's electric power station. This also applies analogously for generators to be operated in parallel and where the power has to be transferred from one generator to another in the event of any one generator has to be switched off.
For emergency generators, full rated load by suddenly putting on is not to be less than the specified general emergency load.

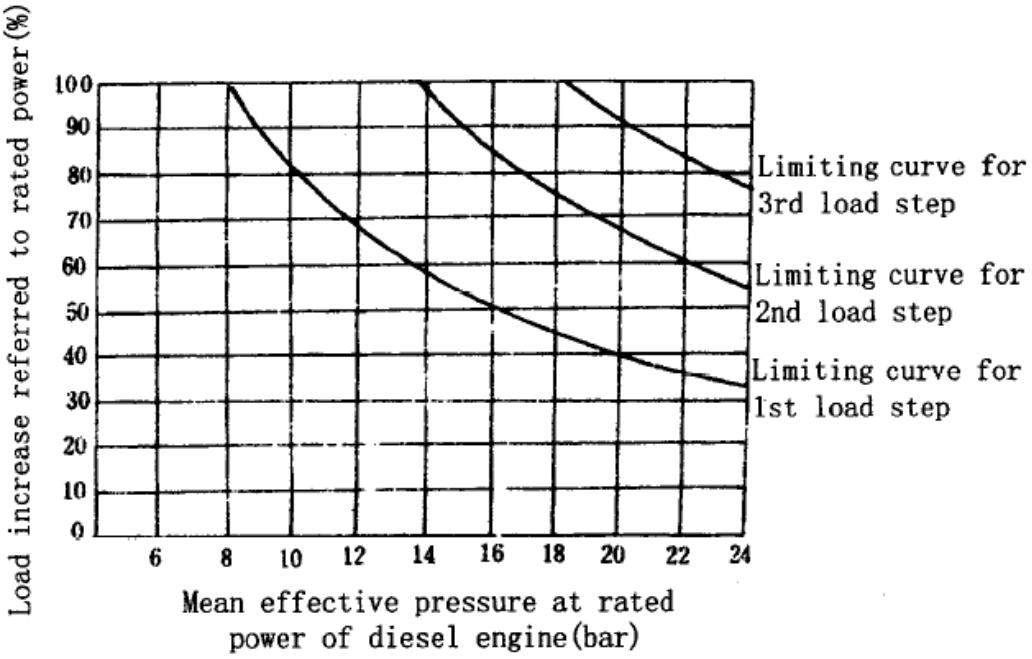

Fig. 9.7.3.1

9.7.3.2 For auxiliary engines developing over 220 kW and driving electric generators, overspeed protective devices are to be provided in addition to the governors prescribed in 9.7.3.1, so as to prevent the rated speed from being exceeded by more than 15%.

9.7.3.3 The construction and performance of governors for auxiliary engines intended for driving electric generators are to be in accordance with the relevant provisions specified in Chapter 4. If the generating sets are arranged to operate in parallel, their permanent speed variations are to be the same as far as possible.

9.7.3.4 Overspeed protective devices mentioned in 9.7.2.1 and 9.7.3.2 are to be independent of the governors.

9.8 HYDRAULIC TESTS

9.8.1 Test pressure

9.8.1.1 The items of diesel engines subject to pressure are to be tested by hydraulic pressures as given in Table 9.8.1.1. Only special consideration is to be given to the design or testing features can the test requirements be modified.

Table 9.8.1.1
Hydraulic test

No.	Item	Test pressure①
1	Cylinder cover, cooling space③	0.7 MPa
2	Cylinder liner, cover shole length of cooling space	0.7 MPa
3	Cylinder jacket, cooling space	1.5 P or 0.4 MPa, whichever is greater
4	Exhaust valve,cooiling space	1.5 P or 0.4 MPa, whichever is greater
5	Piston crown, cooling(where the cooling space is sealed by piston rod, test after assembly)③	0.7 MPa
6	High pressure fuel injection system: Pressure sides of fuel injection pump body Fuel injection valve Fuel injection pipes	 1.5 P or P + 30 MPa, whichever is greater 1.5 P or P + 30 MPa, whichever is greater 1.5 P or P + 30 MPa, whichever is greater
7	Hygh pressure piping to drive exhaust gas valves	1.5 P
8	Scavenge pump cylinder	0.4 MPa
9	turboblower,cooiling space	1.5 P or 0.4 MPa, whichever is greater
10	Exhaust pipe,cooiling space	1.5 P or 0.4 MPa, whichever is greater
11	Engine driven air compressor (cylinder covers, intercoolers and after coolers): Air side Water	1.5 P
12	Coolers, each side②	1.5 P or 0.4 MPa, whichever is greater
13	Engine driven pumps (oil, water,fuel,bilge)	1.5 P or 0.4 MPa, whichever is greater

Notes:
①p is the maximum working pressure in the item concerned.
②Charge air coolers need only be tested on the water side.
③For forced steel cylinder covers and piston crowns, alternative testing methods will be specially considered, e. g. records for non-destructive tests and size measuring, as appropriate.

CHAPTER 10 TRANSMISSION GEARING

10.1 GENERAL REQUIREMENTS

10.1.1 Application

10.1.1.1 The requirements of this Chapter are applicable to oil engine gearing for main propulsion purposes and for oil engine gearing for driving auxiliary machinery where the transmitted powers exceed 147 kW for

propulsion drives, and 100 kW for auxiliary drives. The requirements may also be applicable to the oil engine gearing with less transmitted powers for reference.

10.1.2 Strengthening for navigation ice

10.1.2.1 In the case of ships strengthened in ice, the transmission gearing of main propulsion systems is to comply with the relevant requirements in Chapter 14.

10.1.3 Vibration and alignment A

10.1.3.1 For the requirements for vibration and alignment of the transmission gearing, see Chapter 12.

10.1.4 Plans and documents

10.1.4.1 For all the transmission gearing covered in the application as specified in 10.1.1.1, the following plans and documents are to be submitted to the Society for- approval:

a. General arrangement (longitudinal and transverse sections);
b. Details of pinions and wheels, including ring gear, where applicable, and parameters necessary for calculation of load capacity;
c. Gear Shafts;
d. Hubs (if fitted);
e. Clutches and/or coupling;
f. Other power transmitting parts;
g. Gear casing, incl. propeller thrust bearing housing, if applicable;
h. Basic sizes of the tooth profile of the tools;
i. Calculations of the load capacity of gears;
j. Strength calculations of shafts;
k. Strength calculations of clutches and/or coupling;
l. Calculation of combined dynamic reaction forces and its acting direction of sliding bearing for gearboxes;
m. Details of heat treatment of gears;
n. Details of gear materials;
o. Details of wild procedures for gears or gearbox, if any.

10.2 MATERIAIS

10.2.1 Material properties

10.2.1.1 Shafts, gear, wheel's rim, if any, couplings, etc. of the transmission gearing are to be made of steel forging, and the materials for forgings are to be in accordance with the relevant requirements of the Rules for Materials and Welding by the Society.

10.2.1.2 For gears of through-hardened steels, provision is to be made for a hardness differential between pinion teeth and wheel teeth. For this purpose, the specified tensile strength is not to be more than 85% of that of the pinion.

10.2.1.3 The full specified minimum tensile strength of the core is to be 800 N/mm2 for induction hardened or nitride gearing and 750 N/mm2 for carburized gearing.

10.2.1.4 Where it is proposed to use alloy steel forging, details of the chemical composition, heat treatment and mechanical properties are to be submitted for approval by the Society.

10.2.2 Non-destructive tests

10.2.2.1 An ultrasonic examination is to be carried out on all gear blanks where the finished diameter of the surfaces, where teeth will be cut, is in excess of 200mm.

10.2.2.2 Magnetic particle or liquid penetrant examination is to be carried out on all surface-hardened teeth. This examination may also be requested on the finished machined teeth of through-hardened gears.

10.3 DESIGN AND CONSTRUCTION

10.3.1 Design

10.3.1.1 The calculation of load capacity of gears may be obtained by the method required in Guidelines for Evaluation of Gear Strengh by the Society.

10.3.2 Tooth form

10.3.2.1 The roots of teeth are to be formed with smooth fillets of radius not less than 0.25 m_n.

10.3.2.2 Where the ratio of working length over the gear faces to reference diameter of pinion exceeds 1.5, the ends of the teeth are to be chamfered.

10.3.2.3 The teeth of pinions and wheels are to be suitably relieved on flanks in cases where any of the following conditions applies:

a. Normal module of teeth exceeds 6 mm;
b. Addendum of pinion teeth exceeds 65% of total working depth of engagement;
c. Ratio of total working depth of engagement to normal pitch of teeth exceeds 0.75.

10.3.3 Tooth surface

10.3.3.1 The hardened layer of the surface-hardened gear is to be distributed over and extended to the whole tooth surfaces and fillets.

10.3.3.2 For nitrided gear, generally, the depth of nitrided layer is not to be less than 0.40 mm.

10.3.3.3 For surface—hardened gears (expect the nitrided) the depth of hardened layer is not to be less than 0.15 m_n.

10.3.3.4 For carburized gears, the surface hardness is generally not to be less than HRC 58.

10.3.4 Gear

10.3.4.1 The grade of accuracy of gear cutting is to be not less than 7 for diesel engines and 6 for turbines.

10.3.4.2 Where bolts are used to secure the side plates to rim and hub of the wheels, the bolts are to be tight fit in holes and the nuts are to be suitably locked by means other than welding.

10.3.5 Gear stalls

10.3.5.1 The diameter of the quill shafts is to be not less than value obtained from the following formula:

$$d = 100\sqrt[3]{\frac{400N_e}{n_e\sigma_b}} \quad \text{mm}$$

Where:
N_e - The maximum continuous output transmitted by the shaft, in kW;
n_e – speed of the shaft at N_e , in r/min;
σ_b - specified tensile strength of shaft material, in N/mm2 but not exceeding 1100 N/mm^2.

10.3.5.2 The diameter of gear shafts is to be calculated in accordance with 11.2.2.

10.3.5.3 Where the gear is fitted on the gear shaft by key or shrink-fit, the diameter of gear shafts at the fitting area is to be increased by 5% over the value determined in 10.3.5.2.

10.3.5.4 Where the wheel shaft is driven by only one pinion or by two pinions arranged to subtend an angle at the centre of the shaft of less than 120°, the diameter of the wheel shaft between bearings is at least to be increased by 15% over the value determined by 10.3.5.2. Where it is driven by two pinions arranged to subtend an angle at the centre of the shaft of more than 120°, the diameter of the wheel shaft between bearings is at least to be increased by 10% over the value determined in 10.3.5.2.

10.3.6 Gear casing

10.3.6.1 Gear casings of welded construction are to be stress-relief heat treated on completion of welding in accordance with relevant requirements of the Rules for Materials and Welding by the Society.

10.3.6.2 Gear casing are to be of sufficient strength and rigidity, and are to be provided with inspection openings and adequate venting devices.

10.3.6.3 Where thrust hearing is provided inside the gear casing, the latter is to be adequately strengthened.

10.3.7 Connections

10.3.7.1 Where the coupling of the output shaft is fitted by means of the oil pressure injection method, the actual shrinkage allowance δ is to comply with the requirements of 11.3.2.3; where shrink—fit is employed, 0.03 in the formula may be ignored.

10.3.7.2 For the shrink—fit of rim to hub, hub to shaft and the shrink-fit of other items, adequate shrinkage and pull-up allowances are to be provided.

10.3.7.3 Clutches and couplings in the transmission gearing are to comply with the requirements of 11.3.

10.3.8 Grade of Meshing

10.3.8.1 Tooth faces are to be evenly meshed. For diesel or turbine transmission gearing, the contact marking is not be less than Grade 7 or Grade 6 respectively;

10.3.9 Reversal

10.3.9.1 For reversible gearing:

a. The speed at free clutching and declutching is to be not less than 50% of the rated speed;
b. The time required for reversal is not to be more than 15 s;
c. Sufficient astern power is to be available.

10.3.10 Lubricating and cooling

10.3.10.1 The construction and arrangement of lubricating oil and cooling systems of transmission gearing are to be in accordance with the requirements of 1.1.3.1.

10.3.10.2 Lubricating oil is to be efficiently conveyed to all bearings, meshed gears and other portions requiring lubrication. The arrangement of oil pockets of sliding bearings is to be such that the effect of combined dynamic force of bearings is taken into account.

10.3.10.3 The lubricating oil system of transmission gearing for diesel engines is to be independent.

10.3.10.4 Where lubricating oil for the transmission gearing is circulated separately under pressure, a standby lubricating oil pump is to be provided. For ships having more than one transmission gearing, one standby lubricating oil pump may be accepted.

10.3.10.5 Thermometers and pressure gauges are to be provided in the pressure lubricating oil systems, and working oil pressure gauge is to be fitted in addition when hydraulic system is employed. An oil level indicator is to be provided for the oil sump of splash lubrication.

10.3.10.6 Where the lubricating oil for the transmission gearing is circulated under pressure, provision is to be made for efficient filtration of the oil. The filters are to be capable of being cleaned without stopping the supply of filtered oil.
The lubricating oil system of transmission gearing for turbines is to be fitted with magnetic strainers.

10.3.10.7 The lubricating oil temperature in the transmission gearing is not to be exceed 70°C, and not to exceed 80 C if roller bearing is fitted.

10.3.10.8 Cooling pipes passing through gear casings are not to have any detachable joint.

10.3.11 Alarm

10.3.11.1 Transmission gearing is to be fitted with alarm devices for low pressure of lubricating oil and in addition, an alarm device for high temperature of lubricating oil is to be fitted in case of transmission gearing whose input power is more than 1470 kW.

10.3.12 Emergency devices

10.3.12.1 For hydraulically controlled transmission gearing, emergency mechanical means are to be provided to ensure that the ship can run at a reasonable speed in the event of failure of hydraulic control systems.

10.3.13 Markings

10.3.13.1 For reversible gearing, the directions of lever or handwheel for ahead and astern running are to be marked at control station. As a common practice, to push the lever forward or to turn the handwhoel clockwise is the way to move the ship ahead.

10.4 Test

10.4.1 Balance test

10.4.1.1 All pinion and gear wheels are to be statically balanced. Where the linear velocity at the reference circle exceeds 25 m/s, dynamic balance test is to be made. Driven parts of the coupling are to be attached to the gear before balancing.
The residual dynamic unbalance is not to exceed:

$$\frac{6.0m}{n} \times 10^2$$ N*mm, for transmission gearing of diesel engines;

$$\frac{2.4m}{n} \times 10^2$$ N*mm, for transmission gearing of diesel engines.

Where:
m - mass of components, in kg;
n - maximum working speed of components, in r/min.
10.4.1.2 Balance test may, however, be omitted for diesel engine gearing, provided that the rotating components are of solid forged construction or have a solid forged centre with shrunk—on rim, and in both cases are machined to give a concentric and uniform cross-section.

10.4.2 Trials

10.4.2.1 The transmission gearing is to be tested according to the test programmes approved by the Society during bench, mooring and sea trials.

CHAPTER 11 SHAFTING AND PROPELLERS

11.1 GENERAL REQUIREMENTS

11.1.1 Application

11.1.1.1 This Chapter is applicable to the shafting of ships propelled by diesel engines, steam turbines, gas turbines or electric propelling motors.

11.1.2 General requirements

11.1.2.1 Where the couplings are separate from the thrust shafts, intermediate shafts, tube shafts (i.e. the shaft which passes through the stem tube, but does not carry the propeller) and screwshafts, provision is to

be made for the couplings to resist the astern pull so that no axial displacements of the couplings relative to the shafts may occur. Excessive stress concentration on the shafts is to be avoided.

11.1.2.2 Materials for shafts and propellers are to comply with the relevant requirements of the Rules for Materials and Welding by the Society. The specified tensile strength of forgings fior shafts is to be selected within the following general limits:

a. For carbon and carbon-manganese steel, 400 ~ 600 N/mm^2;
b. For alloy steel, not exceeding 800 N/mm^2.

For shaft couplings, nodular graphite cast iron may also be accepted.

11.1.2.3 The main propulsion shafting together with its transmission gears are to be capable of withstanding sufficient astern power. For the main propulsion shafting with reduction gears, controllable pitch propellers or electric propelling motors, running astern are not to lead to the overload of main engines.

11.1.2.4 The sliding bearing temperature in the main propulsion shafting and transmission gearing is not to exceed 70°C, and not to exceed 80°C if roller bearing is fitted.

11.1.3 Vibration and Alignment of Shafting

11.1.3.1 The shafting is also to comply with the requirements for shafting vibration and alignment of Chapter 12.

11.1.4 Plans and documents

11.1.4.1 The following plans and documents of shafting and propellers are to be submitted to the Society for approval:

a. Arrangement of Shafting;
b. Thrust shaft, intermediate shaft, to be shaft (where applicable), and screwshaft;
c. General arrangement of stem tube, including oil sealing gland and tube shaft bearing;
d. Strength calculations for shafting, including calculations for the connection of couplings and strength calculations of bolts;
e. Strength calculations for propellers;
f. Propeller (including the clearances between the propeller and hull etc.);
g. Oil shrink fitting of key or keyless propeller together with calculations (where applicable).

11.1.4.2 Detailed sizes and necessary parameters for verifying the calculations are to be indicated in plans.

11.2 SHAFTING

11.2.1 General requirements

11.2.1.1 The minimum diameter of shafts determined by the formula in 11.2.2 is to be checked for the allowable torsional vibration stress as specified in Chapter 12.

11.2.2 Diameter of shafts

11.2.2.1 The shaft diameter d is not to be less than the value determined by the following formula:

$$d = FC\sqrt[3]{\frac{N_e}{n_e}\left(\frac{560}{\sigma_b + 160}\right)} \quad \text{mm}$$

Where:

d – shaft diameter, in mm;

F - factor for the type of propulsion installation;

F = 95, for turbine propulsion installations and diesel and electric propulsion installations with couplings of sliding type;

F =100, for all types installations;

C - factor for different design features (for concrete values, see Table 11.2.2.1);

N_e – rated power transmitted by the shaft, in kW;

n_e – rated speed of the shaft at N_e, in r/min;

σ_b - specified tensile strength of the shaft materials, in N/mm^2. For intermediate shaft, if , σ_b > 800 N/mm^2, it is to be taken as 800 N/mm^2. For screwshaft and tube shaft, if σ_b > 600 N/mm^2 , it is to be taken as 600 N/mm^2.

11.2.2.2 Screwshafts or tube shafts forward of the aft peak bulkhead may be gradually reduced to the diameter of the intermediate shaft.

11.2.2.3 The diameter of the screwshaft determined in accordance with the formula in 11.2.2.1 based on the C value of 1.22 or 1.26 is to extend over a length not less than that to the forward edge of the bearing immediately forward of the propeller or 2.5 times the diameter of the screwshaft, whichever is the greater.

Table 11.2.2.1

Factor C for different design features

For intermediate shafts with					For thrust shafts external to engines		For screwshafts		
Integral Coupling Flanges	Shrink fit coupin g	Keyways	Radial bores transvers e holes	Longitudinal slots	Outside the thrust collar at a length equal to the thrust shaft diameter, the remainder may be tapered down to the diameter required for the intermediate shaft	In way of axial bearing where a roller bearing is used as a thrust bearing	Carrying a keyless propeller shrunk on under oil pressure or attached by means of a flange and where the shafts are oil lubricated and provided with and approved type of oil scaling glands or are fitted with continuos liners	Carrying a keyed propeller and where the shafts are oil lubricated and provided with and approved type of oil scaling glands or are fitted with continuous liners	Diameter of the portion of screwshafts required by 11.2.2.3 till it reaches the aft peak bulkhead
1.0①	1.0②⑤	1.10③⑤	1.10④⑤	1.20	1.10	1.10	1.22	1.26	1.15

NOTES

①The fillet radius at the base of the flange is not to be less than 0.08d.

②For over the length of at least 0.2d of the shaft from the ends of keyway and, diameter of the shaft is to be increased by taking C=1.10. The diameter of the shaft is to be decreased by taking C=1.0 for the range beyond. The fillet radius in the transverse section at the bottom of the keyway are to be not less than 0.0125d.

③For over a length of at less 0.2d of the shaft from the ends of hole and, the diameter of the shaft is to be increased by taking C=1.10. The diameter of the shaft is to be decreased by taking C=1.0 for the range beyond. The diameter of the hole is not to be greater than 0.3d.

④ For over the length of at least 0.3d of the shaft from the longitudinal slot and its ends, diameter of the shaft is to be increased by taking C=1.20. The diameter of the shaft is to be decreased by taking C=1.0 for the range beyond. The length and width of longitudinal slots are not to be more than 1.4d and 0.2drespectively.

⑤For shaft having several design features, the factor is to be the product of several factors.

⑥Where, d is calculated with C=1.0

11.2.3 Modification of shaft diameter

11.2.3.1 Where the shafts have central holes with a diameter $d_0 > 0.4$ d, the diameter of the shafts is tube modified by the following formula:

$$d_c = d \sqrt[3]{\frac{1}{1 - \left(\frac{d_o}{d_a}\right)^4}} \quad \text{mm}$$

Where:

d_c - diameter of shafts after modification, in mm;

d - shaft diameter determined by 11.2.2.1, in mm;

d_0 – actual diameter of central hole of the shafts, in mm;
d_a – actual external diameter of the shafts, in mm.

11.2.3.2 The edges of slots and holes in the shafts are to be smooth and without any traces of machining.

11.2.3.3 For ships engaged only in harbor service, the minimum diameter of the shafts may be reduced by 3%.

11.2.4 Shaft liners

11.2.4.1 The thickness t of bronze shaft liners shrunk on tube shafts or screwshafts, in way of the bushes, is not to be less than:

$$t = 0.0311 + 7.5 \text{ mm}$$

Where:
d—diameter of tube shaft or screwshaft in way of the bushes, in mm.

11.2.4.2 The thickness of a continuous liner between the bushes may be somewhat reduced, but is not to be less than 0.75 r.

11.2.4.3 Continuous liners are to be generally cast in one piece. Where necessary, they may consist of two or more pieces, but these are to be butt-welded by the methods approved by the Society.

11.2.4.4 Where the portion of the shaft between any two lengths of the liner is protected with glass-reinforced plastics or other industrial plastics, the protection at the junction of the liner ends is to be of such a construction as to prevent the shaft from water ingress. The connection portions are not to be located within the bearing range.

11.2.4.5 Shaft liners which are cast in one piece or consist of two or more lengths, are to be subjected to hydraulic test to a pressure of 0.2 MPa after rough machining, and there is to be no crack or leakage.

11.2.4.6 Liners are to be carefully shrunk on, or forced on, to the shafts by hydraulic pressure. Pins are not to be used to secure the liners.

11.2.4.7 Effective means are to be provided for preventing water from reaching the shaft at the part between the after end of the liner and the propeller boss.

11.2.5 Stern tubes and bearing

11.2.5.1 The length of the bearing in the stern bush next to and supporting the propellers is to be as follows:

a. For water lubricated bearing which are lined with lignum vitae, rubber composition or staves of approved plastic material, the length of the bearing is to be not less than 4 times the rule calculated

diameter for the screwshaft under the liner or 3 times the actual diameter, whichever is the greater. With reference to the shafting alignment calculations and subject to approval of the Society, the length of the bearings may be appropriately reduced.

b. For bearings which are white—metal lined and oil lubricated, the length of the bearings is to be not less than twice the rule calculated diameter for the screwshaft, or 1. 5 times the actual diameter, whichever is the greater. With reference to the shafting alignment calculations and subject to approval of the Society, the length of the bearings may be appropriately reduced.

c. For oil or water lubricated which are lined with plastics composition materials, the length of the bearing is to be not less than twice the diameter of propeller shaft required and subject to approval of the Society.

d. For bearings which are lined with other materials or lubricated by other methods, the length of the bearing is subject to agreement of the Society.

11.2.5.2 Forced water lubrication is to be provided for all bearings lined with rubber or plastics and for those lined with lignum vitae where the shaft diameter is 400 mm or over. A shut-off valve or cock controlling the supply of water is to be fitted direct to the after peak bulkhead or to the stern tube where the water supply enters the stem tube forward of the bulkhead.

11.2.5.3 Bearings which are oil lubricated are to be fitted with an approved oil sealing gland.

11.2.5.4 Where a gravity tank supplying lubricating oil to the stern bush is fitted, it is to be located above the load waterline and is to be provided with a low level alarm device in the engine room.

11.2.5.5 Where stem bush bearings are oil lubricated, provision is to be made for the oil by maintaining water in the after peak tank above the level of the stern tribe or by other suitable means.

11.2.5.6 Stem tubes are to be subjected to hydraulic test to a pressure of 0.2 MPa before being fitted on board ship.

11.3 SHAFT TRANSMISSION UNITS

11.3.1 Application

11.3.1.1 The requirements of this Section apply to couplings, hydraulic transmission arrangements, clutches as well as controllable pitch propeller blade actuators. For transmission gearing, see Chapter 10.

11.3.2 Coupling

11.3.2.1 Flange couplings are to comply with the following requirements:

a. The thickness of coupling flanges is not to be less than 20% of the intermediate shaft diameter required in 11.2.2.1, nor is it to be less than the diameter of the fitting coupling bolts whose

minimum tensile strength is equivalent to that of the shafts. The fillet radius at the base of the coupling flange is not to be less than 8% of the actual diameter of the shaft at the coupling.

b. Where the propeller is attached to the screwshaft by means of a coupling flange, the thickness of the flange is not to be less than 25% of the actual diameter of the adjacent part of the screwshaft. The fillet radius at the base of the coupling flange is not to be less than 12.5% of the actual diameter of the shaft at the coupling.

c. Fillets are to have a smooth finish and not to be recessed in way of nuts and bolt heads. Subject to agreement of the Society, the fillet may be formed of multiradii.

11.3.2.2 Where the coupling is fitted to the shaft with a key and the torque is transmitted through the key, the effective sectional area of the key in shear is to be not less than that determined by the following formula, and the tensile strength of the key material is to be equal to or greater than that of the shaft material:

$$BL \geqslant \frac{d^3}{2.6 d_m} \qquad \text{mm}^2$$

Where:

B - breadth of key, in mm;

L - effective length of key, in mm;

d - diameter of intermediate shaft determined in 11.2.2.1, in mm;

d_m - diameter of shaft at mid-length of the key, in mm.

11.3.2.3 Keyless couplings fitted by oil shrink method are to meet the following requirements:

a. Muff couplings are to have a capacity of transmitting a torque which is 2.7 times the mean torque and their equivalent stress of the maximum shrinkage allowance is to be not more than 70% of the yield stress of the muff material.

b. For general couplings which are not covered in (a) above, the pull-up S or shrinkage allowance δ is to meet the following requirements:

$$S_1 \leqslant S \leqslant S_2 \qquad \text{mm}$$

$$\delta_1 \leqslant \delta \leqslant \delta_2 \qquad \text{mm}$$

$$S_1 = \frac{\delta_1}{K} = \frac{1}{K}\left[\frac{1672 N_e}{A n_e}(c_1 + c_2) + 0.03\right] \qquad \text{mm}$$

$$S_2 = \frac{\delta_2}{K} = \frac{0.034 \times 10^{-4}}{K} \sigma_s d_1 (c_1 + c_2) \frac{K_2^2 - 1}{\sqrt{3K_2^4 + 1}} \qquad \text{mm}$$

Where:

S_1 - minimum axial pull-up, in mm;

S_2 - maximum axial pull-up, in mm;

δ_1 - minimum shrinkage allowance, in mm;

δ_2 - minimum shrinkage allowance, in mm;

K - taper of the shaft for shrink-fit;

N_e -rated power transmitted by the shaft, in kW;

n_e - speed of the shaft at N_e , in r/min;

A - theoretical contact area of the shrinkage surface, in mm;

$$c_1 = \frac{1 + K_1^2}{1 - K_1^2} - \mu_1;$$

$$c_2 = \frac{K_2^2 + 1}{K_2^2 - 1} + \mu_2;$$

$$K_1 = \frac{d_o}{d_1};$$

$$K_2 = \frac{d_2}{d_1};$$

Where:

d_0 - bore diameter of the shaft, in mm;

d_1 - mean diameter of the shaft within the contact length, in mm;

d_2 - mean outside diameter of the coupling within the contact length, in mm;

$$\mu_1 = \mu_2 = 0.3;$$

σ_s — specified yield stress of the coupling material, in N/mm^2.

11.3.2.4 Clamp couplings are to meet the following requirements:

a. Clamp couplings are to have a strength at least equal to the required strength of the intermediate shaft.
b. The clamp coupling is to be provided with a key. For couplings transmitting thrust, a satisfactory axial locking device is to be provided.
c. Torque is to be transmitted by the frictional moment resulting from clambing and the key. The frictional moment is to be not less than the rated torque to prevent track slip and the sizes of the key are to be not less than 2/3 of those determined by the formula in 11.3.2.2.
d. The clamping length of the coupling is normally to be at least 2.4 times shaft diameter.

11.3.2.5 Where other types of couplings or connections are used for torque transmission, detailed specifications and calculations are to be submitted to the Society for the purpose of examining their reliability.

11.3.3 Coupling bolls

11.3.3.1 The diameter of the fitting bolts at the joining faces of the couplings is to be not less than that given by the following formula:

$$d_f = 15.92\sqrt{\frac{N_e \times 10^6}{n_e D Z \sigma_b}} \quad \text{mm}$$

Where:
N_e - rated output transmitted by the shaft, in kW;
n_e – speed of the shaft at N_e , in r/min;
Z - number of bolts;
D - diameter of pitch circle of bolts, in mm;
σ_b - specified tensile strength of bolt material, which is to be not less than the tensile strength of the intermediate shaft, but not to be more than 1000 N/mm^2, in N/mm^2.

11.3.3.2 Where it is proposed to use non-fitting bolts for connections, the diameter dn at the root of thread of the bolts is to be not less than that determined by the following formula:

$$d_n = 25\sqrt{\frac{N_e \times 10^6}{n_e D Z \sigma_b}} \quad \text{mm}$$

Where: the symbols are as defined in 11.3.3.1.

The prestressing force and workmanship of fitting of the non-fitting bolts are to be agreed with the Society.

11.3.3.3 Bolts connecting propellers and screwshafts are to be fitting bolts, the diameter of which is to be increased by 5% of that determined in 11.3.3.1.

11.3.3.4 For ships engaged only in harbour service, the diameter of the connecting bolts may be reduced by 4%.

11.3.3.5 The diameter of the fitting bolts at the joining faces of the couplings within the crankshaft and thrust shaft/crankshaft is to be not les then 1.05 times that determined by 11.3.3.1.

11.3.4 Clutches and control devices

11.3.4.1 The friction elements of clutches for reversible gearings are not to give any slip in normal running. While the clutch is disengaged, the propulsion shafting is not to he dragged along by the driving shaft.

11.3.4.2 The maximum torque transmitted by the clutch is, in general, not to be less than 1.5 times the rated torque of the main engine.

11.3.4.3 The flexible clutches controlled by air pressure are to be provided with air charging pressure gauges, signal devices for indicating clutching and declutching of the clutches and alarm devices for giving warning of high and low air pressures.

11.3.4.4 An emergency device for air charging is to be fitted to the system which supplies air to the pneumatic flexible clutch.

11.3.4.5 For reversible clutches, the time required for reversal is not to be more than 15s.

11.3.4.6 In single screw ships having clutches, emergency mechanical means are to be provided to ensure that the ship can run at a reasonable speed in the event of failure of the clutches.

11.3.5 Hydraulic transmissions

11.3.5.1 In single screw ships having emergency mechanical means are to be provided to ensure that the ship can run at a reasonable speed in the event of failure of the hydraulic transmission systems.

11.3.5.2 The lubricating oil system of hydraulic transmission arrangements is to be separate from other systems. The system is to consist of filters, coolers, drain tanks, etc. In the case of hydraulic gear transmission, in addition, magnetic filters are to be provided in the system.

11.3.5.3 Hydraulic transmission arrangements are to be provided with separate stand-by pumps. For propulsion systems with twin-engine and twin-screw, one stand-by pump may be accepted.

11.3.5.4 ln addition to thermometers and pressure gauges, the lubricating oil system of hydraulic transmission arrangements is to be fitted with alarm devices for giving warnings of an excessive temperature and appreciable reduction in pressure of the oil supply.

11.3.5.5 The runners and impellers of hydraulic couplings are to be statically balanced. Furthermore, it is recommended that the runners and impellers be dynamically balanced.

11.3.5.6 Signal devices for indicating oil charging and discharging are to be fitted at the control positions of hydraulic transmission arrangement.

11.3.5.7 The hydraulic transmission arrangements may be controlled at the engine side and in the centralized control station or on the bridge. Where two or more control devices are fitted, they are to be interlocked one another.

11.3.5.8 In the case of multiple engines operating on one screwshaft, an interlocking device is to he provided in the control gear of the hydraulic transmission arrangement to prevent them from being filled with oil when the engines are in opposite directions.

11.3.5.9 At the centralized control station of hydraulic transmission, a tachometer showing the speed of the screwshaft and an indicator showing the direction of its rotation are to be fitted.

11.3.6 Transmission and control devices for controllable pitch propeller

11.3.6.1 The hydraulic transmission system of controllable pitch propeller blade actuators is to be provided with a separate stand—by pump having a capacity of not less than that required for normal operation of one propeller.

11.3.6.2 Pitch angle indicators are to be fitted both at the engine room control station and on the bridge. The deviation from the actual pitch angle is not to exceed ±1°.

11.3.6.3 The control system in the engine room is to be interlocked with that on the bridge. For control systems other than those actuated by mechanical devices, a stand-by manual control is to be fitted at the engine side.

11.3.6.4 The control system of hydraulic controllable pitch propeller blade actuators is to be such that the blade pitch can be altered efficiently and accurately.

11.3.6.5 Under any working conditions, the blade position of controllable pitch propellers is to be stable. Its fluctuation at 0° pitch angle is not to exceed ±0.5°.

11.3.6.6 At the rated speed of the propeller, the time required for the change of pitch angle from 1/3 positive maximum (or 1/3 negative maximum) to 1/3 negative maximum (or 1/3 positive maximum) is not to exceed 15s.

11.3.6.7 Before being installed on board, the pipe lines and pressure elements of hydraulic transmission system and control system for controllable pitch propellers are to be subjected to hydraulic nests to a pressure of 1 .5 times the working pressure. On completion of installation, the system is to be tested to 1.25 times the working pressure for tightness.

11.4 PROPELLERS

11.4.1 General requirements

11.4.1.1 Propellers are to be subject to surface inspection and size verification as well as to static balancing test. For built-up propellers and controllable pitch propellers, the static balancing test is to be carried out after machining and assembling.

11.4.1.2 Blade fastening studs of built-up propellers are to be made of forged steel having a tensile strength not less than 400 N/mm^2.

11.4.1.3 Fasteners (studs, nuts, etc.) for propellers and for their accessories are to be fitted with reliable devices to prevent loosening and corrosion.

11.4.2 Clearances between propeller and hull

11.4.2.1 For the purpose of modifying the effect of propeller excitation on hull, the necessary minimum clearances between the propeller and the hull are to be provided as specified in these regulations.

11.4.3 Thickness of propeller blades

11.4.3.1 The thickness of propeller blades t (at 0.25R and 0.6R for solid propellers, and at 0.35R and 0.6R for controllable pitch propellers) is not to be less than that calculated by the following formula:

$$t = \sqrt{\frac{Y}{K - X}} \quad \text{mm}$$

Where:
Y – power coefficient, to be obtained from 11.4.3.2;
K - material coefficient given in Table 11.4.3.1;
X- speed coefficient, to be obtained from 11.4.3.3;

Table 11.4.3.1
Propeller material Coefficient K

Material	tensile strengh	Material density	Material Coefficient K
Carbon and alloy steel	400	7.9	0.57
Ferritic or Martensitic stainless steel	500	7.7	1.04
Austenitic stainless steel	450	7.9	1.04
Cu1 Manganesse bronze	440	8.3	1
Cu2 Ni- Manganese bronze	440	8.3	1
Cu3 Ni- Manganese bronze	590	7.6	1.38
Cu4 Ni- Manganese bronze	630	7.5	1.17

Note: For materials other than specified in the above table, the value K may be determined by making reference to those given in the table, but subject to agreement of the Society.

11.4.3.2 Power coefficient Y is to be calculated by the following formula:

$$Y = \frac{1.36 A_1 N_e}{Z b n_e}$$

Where:

$$A_1 = \frac{D}{P}\left(K_1 - K_2 \frac{D}{P_{0.7}}\right) + K_3 \frac{D}{P_{0.7}} - K_4;$$

D –propeller diameter, in m;

P - pitch at the section under consideration, in m;

$P_{0.7}$ - pitch at 0.7 R, in m;

R - propeller radius, in m;

K_1, K_2, K_3, K_4 - coefficients given in Table 11.4.3.2;

N_e - rated power of the main engine, in kW;

Z -number of blades;

b - blade width at the section under consideration, in m;

n_e - speed of the propeller at rated power of main engine, in r/min.

For aerofoil sections with trailing edge washback, the value of A_1 obtained from above formula is to be increased by 30%.

Table 11.4.3.2

Coefficient K Values in way of different diameters of propeller

r	K1	K2	K3	K4	K5	K6	K7	K8
0.25 R	634	250	1410	4	82	34	41	380
0.35 R	520	285	1320	16	64	28	57	420
0.60 R	207	151	635	34	23	12	65	330

11.4.3.3 Speed coefficient X is to be calculated by the following formula:

$$X = \frac{A_2 G A_d n_e^2 D^3}{10^{10} Z b}$$

Where:

$$A_2 = \frac{D}{P}(K_5 + K_6\varepsilon) + K_7\varepsilon + K_8 ;$$

D, P, n_e, Z and b as defined in 11.4.3.2;

Ɛ - backward rake angle, in degrees;°

K_5, K_6, K_7, K_8 - coefficients given in Table 11.4.3.2;

G - density of the propeller material, in g/cm^3;

A_d - expanded area ratio.

11.4.3.4 Subject to agreement of the Society, the thickness of propeller blades is permitted to be calculated by some other appropriate methods.

11.4.3.5 Depending on the condition of application of the propeller, the Society may require that detailed data of wake field in periphery of the propeller be submitted or that the thickness of blades be increased.

11.4.4 Fitting of propellers to screwshafts

11.4.4.1 Where it is proposed to fit the propeller to the screwshaft with a flange, the diameter of flange bolts is to comply with the requirements of 11.3.3.1 and 11.3.3.3, and the thickness of flanges is to comply with the provisions of 11.3.2.1(b).

11.4.4.2 Where it is proposed to fit the propeller to the screwshaft with a key, the propeller boss is to be a good fit on the screwshaft cone. The length of the forward fitting surface is to be about the diameter of the screwshaft.

The taper of the coned end of screwshaft is not to exceed 1/12, and for keyless propellers fitted by oil injection method, such taper is not to exceed 1/15.
The intersection of cylindrical and conical portions of screwshafts is not to be shouldered or rounded. The forward end of the keyway in the screwshaft is to be smoothed and sled-runner shaped. The distance from the forward end of the keyway to the big end of conical portion of the shaft is not to be less than 0.2 times the diameter of the big end.
There is to be a clearance between the top of the key and the hub. The lateral sides of the key are to be in close contact with those of the keyways in the screwshaft and the propeller boss. The bottom of the keyways are to be provided with a smooth fillet, and the fillet radius is not to be less than 1.25% of the diameter of the big end of the cone.
Keys are to be secured to the shafts by screws. The forward screw is to be placed at least 1/3 of the length of the key from the end. The depth of the screw holes is not exceed the diameter of screw holes, and the edges of the holes are to be beveled.

11.4.4.3 Where the torques are transmitted completely by the keys, the effective sectional area of the key in shear is not to be less than the value determined by the following formula, and the tensile strength of the material is to be equal to or greater than that of the shaft material:

$$BL \geqslant \frac{d^3}{2.35\, d_m} \qquad \text{mm}^2$$

Where:
B - breadth of the key, in mm;
l - effective length of the key, in mm;
d - diameter required for the intermediate shaft, in mm;
d_m - diameter of shaft at mid-length of the key, in mm.

11.4.4.4 The fitting of a keyed propeller is preferable to meet the following requirements, and the size of keys may be suitably reduced:

a. The safety factor of friction force against sliding is to be not less than 1.0 at sea water temperature of 35°C;
b. The inner surface pressure of propeller boss is to be not less than 20 MPa at sea water temperature of 15 °C;
c. The equivalent uniaxial stress at the inner surface of propeller boss is to be not more than 35% of the specified minimum yield stress of the material concerned at sea water temperature of 0°C.

11.4.5 Fitting of keyless propeller by oil shrink method

11.4.5.1 Where it is proposed to fit a keyless propeller by the oil shrink method, the pull-up S on the screwshaft is to meet the following requirements:

$$S_1 \leqslant S \leqslant S_2 \qquad \text{mm}$$

$$S_1 = \frac{1}{K}\left[47750 \times 10^4 \frac{N_e}{An_e}\left(\frac{C_1}{E_1} + \frac{C_2}{E_2}\right) + (\alpha_2 - \alpha_1)(35 - t)d_1 + 0.03\right] \qquad \text{mm}$$

$$S_2 = \frac{1}{K}\left[0.7\sigma_s d_1 \frac{K_2^2 - 1}{\sqrt{3K_2^4 + 1}}\left(\frac{C_1}{E_1} + \frac{C_2}{E_2}\right) - (\alpha_2 - \alpha_1)d_1 t\right] \qquad \text{mm}$$

Where:

S_1 - minimum axial pull-up, in mm;

S_2 - maximum axial pull-up, in mm;

K - taper of the screwshaft cone, K ≤ 1/15;

N_e - rated output transmitted to the screwshaft, in kW;

n_e - speed at rated output N_e , in r/min;

A - theoretical contact area of propeller boss and screwshaft, in mm^2;

$$C_1 = \frac{1 + K_1^2}{1 - K_1^2} - \mu_1;$$

$$C_2 = \frac{K_2^2 + 1}{K_2^2 - 1} + \mu_2;$$

$$K_1 = \frac{d_o}{d_1};$$

$$K_2 = \frac{d_2}{d_1}$$

d_0 - bore diameter of screwshaft, in mm;

d_1 - mean diameter of the shaft within the contact length, in mm;

d_2 - mean outside diameter of the propeller boss, in mm;

μ_1 = 0.30;

μ_2 = Poisson's ratio for propeller material. For copper propeller, in general, μ_2 = 0.34;

$$E_1 = 20.6 \times 10^4 \quad N/mm^2;$$

E2 - modulus of elasticity of propeller material. For copper propeller, in general, $E_2 = 11.77 \times 10^4$ N/mm^2

t - temperature at time of fitting propeller on shaft, in°C;

$\alpha_1 = 11 \times 10^{-6}$ 1/℃;

α_2 - coefficient of linear expansion of propeller material. For copper propeller, in general, $\alpha_2 = 18 \times 10^{-6}$ 1/ °C ;

σ_s - specified yield stress of propeller material, in N/mm^2.

11.4.5.2 Prior to final pull-up, the actual contact area of the propeller boss and conical portion of the shaft is not to be less than 70% of the theoretical contact area. In general, it may be examined by means of blue oil test.

11.4.5.3 Prior to final pull-up, the propeller and shaft are to be at the same temperature and the mating surfaces are to be clean and free from oil or grease. The bedding of the propeller with the shaft is to be demonstrated in the workshop to the satisfaction of the Surveyor.

11.4.5.4 A copy of the fitting curve relative to temperature, and data of corresponding loads are to be kept on board. Special tools for fitting and dismantling purposes are also to be provided on board.

11.4.6 Protection of controllable pitch propellers

11.4.6.1 A sealing is no be inserted between the propeller blade and the propeller boss to prevent the ingress of sea water and sand as well as the leakage of lubricating grease.

11.4.6.2 The inside of the propeller bosses is to he filled up with lubricating grease.

CHAPTER 12: SHAFT VIBRATION AND ALIGNMENT

12.1 GENERAL REQUIREMENTS

12.1.1 General requirements

12.1.1.1 The arrangement of shafting and the scantlings of shafts are, in addition to the provisions of Chapter 11, to comply with the requirements of this Chapter. The whole shafting could only be finally approved after the previous approval of the torsional, axial and lateral vibrations as well as the alignment of the said shafting.

12.1.1.2 Calculations for vibration and alignment of shafting are to be submitted to the Society for approval. Reports on measurements as deemed necessary by the Society are to be submitted for approval or information.

12.1.1.3 Novel and sophisticated shafting may be approved by the Society provided that measurement reports for similar installations are available and proved to be in compliance with provisions of this Chapter.

12.1.1.4 Where changes are subsequently made to a shafting which has been approved, e.g. by fitting a highly flexible coupling, changing the size of shaft bearings and the engine type, or fitting a gearbox or a propeller of a different design, or changing the number of etc. revised calculations of shaft vibration and alignment are to be made as appropriate and submitted to the Society for approval.

12.1.1.5 Calculations of shaft vibration and alignment are to include the detailed specifications and documents necessary for approval and checking.

12.1.2 Restricted speed ranges

12.1.2.1 Restricted speed ranges will be imposed in the regions of resonant speeds n, , where amplitudes or stresses or torques resulting from shaft vibration exceed the values for continuous running as specified in this Chapter. The engine is not to be run continuously in such restricted speed ranges.

12.1.2.2 The following speed range is to be avoided:

$$\frac{16n_c}{18-r} \sim \frac{(18-r)n_c}{16}$$

Where:

$r = \frac{n_c}{n_e}$, n_e being the rated speed (r/min).

12.1.2.3 The restricted speed range for continuous operation may be suitably extended Where amplitudes or stresses or torques resulting from vibration approach the values for transient running as specified in this Chapter, and may be adequately reduced where they marginally exceed the limiting value for continuous running.

12.1.2.4 Restricted speed ranges may also be ascertained by measurements, i.e. the range of speed to be avoided for continuous running may be taken as that over which the measured values of amplitudes, or stresses, or torques resulting from shaft vibration are in excess of those allowed for continuous running, having regard to the tachometer accuracy.

12.1.2.5 Where the torsional vibration causes hammering of transmission gears or where the pulsatory torque of the elastic elements exceeds the allowable value for continuous running, restricted speed ranges are also to be imposed.

12.1.2.6 Where restricted speed ranges are imposed, the tachometer accuracy is to be within 1 2% in way of the restricted speed range.

12.1.2.7 Restricted speed ranges are to be marked red on the tachometer, and notice boards are to be fitted in from of the control stations.

12.1.3 Measurements

12.1.3.1 Manufacturers are required to carry out torsional and axial (if required) vibration measurements on benches to their products of a new design or having undergone a major alteration, and to have all the equivalent parameters checked.

12.1.3.2 The Society may decide whether measurements are required for verification, depending upon the conditions of the method of calculation, the magnitudes of amplitudes or stresses or torques contained in the calculations submitted.
The vibration measurements may be dispensed with provided that measurement reports for similar installations are submitted and proved to be in compliance with the provisions of this Chapter.

12.1.3.3 The instrumentation, measured points and a series of revolutions step of vibration measurements are to be such that they can correctly demonstrate the 'characteristics of vibration mode to be measured.

12.1.3.4 Where the difference between the measured and calculated values of natural vibration frequency is less than ± 5%, the amplitudes or stresses (torque) at any cross-section of the system may be generally estimated by the measured amplitudes or stresses (torque) in accordance with the vibration mode under consideration.

12.1.3.5 For the purpose of approval, the measurement reports are to include the detailed, primitive data obtained during measurements.

12.1.4 Miscellaneous

12.1.4.1 Where the bed-plates of machinery are installed on resilient mountings, the shafting is to be elastically connected.

12.1.4.2 The method of calculation and the particulars to be submitted in relation to the requirements of this Chapter may refer to Guidelines for Vibration Control on Board Ships issued by the Society.

12.1.4.3 The pressure gauge and lower pressure alarm or amplitude monitoring device for oil supply are to be fitted for torsional or axial vibration dampers, for which the oil is supplied from the lubricating oil circulating system for main engine.

12.1.4.4 The allowable stress of torsional vibration and allowable amplitude values of axial vibration may also be ascertained in accordance with the requirements of Guidelines for Evaluation of Crankshaft Strength of Diesel Engines by the Society.

12.2 TORSIONAL VIBRATION

12.2.1 Application

12.2.1.1 The requirements of this Section are applicable to the following systems:

a. Main diesel engine propulsion systems, except in the case of ships classed for port service when fitted with engines having powers less than 110 kW.
b. Auxiliary diesel engine machinery systems used {or essential services, where the power developed by the auxiliary engines is 110 kW or over.
c. Main propulsion systems formed by turbines or electric motors geared to the shafting and situated aft.

12.2.2 Torsional vibration calculations

12.2.2.1 Torsional vibration calculation is to include: engine type, rated power, rated revolutions, arrangement, tensile strength of shaft, equivalent parameters of torsional vibration for the dynamic system with necessary specification, Holzer tables for each vibration node under consideration and the associated vectorial sums of relative amplitudes, vibratory response calculation of main harmonics and the corresponding permissible values.

12.2.2.2 Where installations have different application conditions, e.g. combined with clutches, P.T.O. systems or having more than one engine, the torsional vibration calculations are to be carried out for each case.

12.2.2.3 Where there is considerable difference between the sizes of the spare propeller and the working propeller, torsional vibration is also to be calculated for the condition when the spare propeller is used.

12.2.2.4 The special speed requirements for prolonged periods in service are also to be indicated, e.g. the range of the service speed of a controllable pitch propeller and the range of the service speed of a P.T.O. system, etc.

12.2.2.5 Where controllable pitch propellers are fitted, torsional vibration calculations for zero and full pitches are to be carried out.

12.2.2.6 Torsional vibration calculation is to be carried out for the shafting systems containing flexible couplings or transmission gearing, with one cylinder misfiring and with one cylinder failure (with no compression) .

12.2.2.7 In general, the calculation is to cover the resonant conditions arising from all harmonic torque excitation up to order 12, in a speed range of 0.8 n_{min} ~ 1.2 n_e (where n_{min} — the minimum steady speed, in r/min). For diesel engine propulsion system, the calculation of non-resonant condition over 1.2 n_e, from the main harmonic of one node vibration, is also to be carried out.

12.2.3 Allowable stresses

12.2.3.1 The allowable torsional vibration stresses for shafting are to be calculated based on the basic diameters of the shafts, i. e. the crankpin diameter for crankshafts, the minimum diameter for intermediate shafts and the minimum diameter between the aft bearing and the bulkhead gland for screwshafts, and the effect of the stress concentration on the plain sections of the shafting may be neglected.

12.2.3.2 The allowable torsional vibration stresses for main engine crankshafts are not to exceed the values given by the following formulae:

Continuous running

$(0 < r \leqslant 1.0)$:

$$[\tau_c] = \pm [(52 - 0.031d) - (33.8 - 0.02d)r^2] \quad N/mm^2$$

$(1.0 < r \leqslant 1.15)$:

$$[\tau_c] = \pm [(18.1 - 0.0113d) + (87.3 - 0.052d)\sqrt{r - 1}] \quad N/mm^2$$

Transient running

$(0 < r < 0.8)$:

$$[\tau_t] = \pm 2.0[\tau_c] \quad N/mm^2$$

The symbols used in 12.2.3.2 to 12.2.3.4 are defined as follows:

$[T_c]$ — allowable torsional vibration stress for continuous running, in N/mm^2;
$[T_t]$ - allowable torsional vibration stress for transient running, in N/mm^2;
d - basic diameters of shafts, in mm;

$$r = \frac{n_c}{n_e};$$

n_c - critical speed, in r/min;
n_e - rated speed, in r/min.

12.2.3.3 The allowable torsional vibration stresses for thrust, intermediate, tube shafts and screwshaft are not to exceed the values given by the following formulae:

Continuous running

$(0 < r < 0.9)$:

$$[\tau_c] = \pm C_W C_K C_D (3 - 2r^2) \quad N/mm^2;$$

$(0.9 \leqslant r \leqslant 1.15)$:

$$[\tau_c] = \pm 1.38 C_W C_K C_D \quad N/mm^2;$$

Transient running

$(0 < r \leqslant 0.8)$:

$$[\tau_t] = 1.7[\tau_c]/\sqrt{C_K} \qquad N/mm^2;$$

Where:

C_w— material factor; $C_W = (\sigma_b + 160)/18$;

σb - specified tensile strength of shaft material. For intermediate shaft, if σb is greater than 800 N/mm^2, it is to be taken as 800 N/mm^2. For propeller and tube shafts, if σb is greater than 600 N/mm^2, it is to be taken as 600 N/mm^2;

C_K - factor for different shaft design features, see Table 12.2.3.3

C_d, — size factor: $C_D = 0.35 + 0.93d^{-0.2}$

Table 12.2.3.3
Factor for different shaft design features

Intermediate shafts with			For Thrust shaft		For propeller and tube shafts
Integral coupling flanges	Shrink fit couplings	Keyways	On both sides of thrust coiler	Inway of axial bearing where a roller bearing is used as a thrust bearing	---
1	1	0.6	0.85	0.85	0.55

Note: For multiple-arc transition intermediate shaft, if C_k is greater than 1, the testing basis is to be provided and approved by the Society.

12.2.3.4 The allowable torsional vibration stresses for the crankshafts and transmission shafts of diesel engines for generators and of auxiliary diesel engines for essential services and for the crankshafts of propulsion diesel engines with constant speed are not to exceed the values given by the following formulae:

Continuous running

$(0.95 \leqslant r \leqslant 1.10)$:

$$[\tau_c] = \pm (21.59 - 0.0132d) \qquad N/mm^2$$

Transient running

$(0 < r < 0.95)$:

$$[\tau_t] = \pm 5.5[\tau_c] \qquad N/mm^2$$

12.2.3.5 For propulsion shafting running at constant speed, higher vibratory stress limits may be considered, subject to approval of the Society.

12.2.3.6 The tensile strength of intermediate shaft material specified in 12.2.3.2 and 12.2.3.4 is greater than 430 N/mm^2, the allowable stress t´ may be calculated by the following formula:

$$\tau' = \frac{\sigma_b + 184}{614}\tau \qquad N/mm^2$$

Where:
σb - the tensile strength of shaft material, in N/mm^2;
t´- allowable torsional vibration stress determined by 12.2.3.2 and 12.2.3.4, in N/mm^2.

12.2.4 Additional requirements for generators

12.2.4.1 In the case of alternating current generators, the resultant vibration amplitudes at the rotor are not to exceed 2.5(electrical degrees under rated load working conditions.

12.2.4.2 The vibratory inertia torques imposed on the generator rotors are to be limited to ± 2M_e over the speed range of r = 0.95 ~ 1.10 (M_e – mean torque at the rated speed), and to ± 6M_e over the range of r < 0.95.

12.2.5 Allowable vibratory torques for gearing and flexible coupling

12.2.5.1 The vibratory torque at gear engagement of the transmission gearing arrangements is not, in general, to exceed 1/3 of the rated full load mean torque in the range of r = 0.9 ~ 1.05. In cases where tooth surface contact stress and root bending stress of gears are less than the allowable values specified in Guidelines for Evaluation of Gear Strength by the Society, special consideration will be given to the acceptance of higher vibratory torque on the gears.

12.2.5.2 Flexible couplings are to be of such design that vibratory torque of the elastic elements is not to exceed the allowable pulsatory torque for continuous running and not to exceed the allowable pulsatory torque for transient running in the respective running conditions.

12.2.6 Miscellaneous

12.2.6.1 No critical speed is to occur in the range of speed for normal service or in any special speed ranges for service.

12.2.6.2 The torsional vibration stresses caused by the upper flank at r = 0.85 are not to exceed the allowable stress [σ_c]

12.2.6.3 Resulted stresses arising fiurn resonance and major non-resonance are not to exceed 1.5 times the allowable torsional vibration stresses limited by this Section in the range of r = 0.85 to 1.05.

12.2.6.4 Where data from experience or detailed calculations are furnished by manufacturers, allowable torsional vibration stresses (or tongues) as supplied by the manufacturers may be adopted, subject to approval of the Society.

12.2.6.5 The allowable torsional vibration stresses for crankshafts may also be obtained in accordance with the Unified Requirements of the IACS. But the calculations are to be submitted in accordance with the requirements of Guidelines for Evaluation of Crankshaft Strength of Diesel Engines.

12.3 AXIAL VIBRATION

12.3.1 Application

12.3.1.1 For all main propulsion shafting systems, it is to be ensured, so flu as practicable, that excessive axial vibration amplitudes throughout the speed range are not to occur. Otherwise, restricted speed ranges are to be imposed or suitable means for reducing the amplitudes are to be provided as appropriate.

12.3.1.2 Documents of axial vibration characteristics of the large-sized slow-speed two-stroke diesel engine propulsion shafting systems and of the turbine propulsion shafting systems are to be submitted to the Society for approval.

12.3.2 Axial vibration calculations

12.3.2.1 Axial vibration calculations are to be submitted to the Society lior approval. The calculations are to include: engine type, rated power, rated speed, arrangement, equivalent parameters of systems and the necessary specification, the Holzer tables of O-node and 1-node vibration and the associated vectorial sums of relative amplitudes difference, the vibratory response of major harmonics and the associated limits.

12.3.3 Allowable amplitudes

12.3.3.1 For diesel engine propulsion shafting systems, axial vibration amplitudes for continuous running arising from axial vibration in the range of r=0 to 1.0 are not to exceed the values calculated by following formula:

$$[A_{a1}] = \frac{R[\Delta a_o]}{2(\Delta\alpha_k)_{max}(R + \frac{d_j}{2})} \quad \text{mm}$$

Where:
$[A_{a1}]$ allowable axial vibration amplitude for continuous running at the free-end of the crankshaft, in mm;
$(\Delta_{\alpha k})_{max}$ - the maximum relative amplitude difference in the crankshaft of the axial vibration mode under consideration, in mm;
dj - the main journal diameter of the crankshaft, in mm;
$[\Delta a_0]$ - the maximum allowable difference between crank webs, in mm;
R – radius of the crank, in mm.

12.3.3.2 The Society is prepared to give special consideration of the allowable axial vibration amplitudes for the geared shafting.

12.3.3.3 Allowable axial vibration amplitudes for transient running are in general, to be 1.5 times those for continuous running.

12.3.3.4 Where allowable values for continuous running are exceeded, restricted speed ranges are to be imposed. Generally, axial vibration amplitudes caused by resonance or the upper flank at r= 0.85 are not to exceed the allowable values for continuous running, and those caused by resonance or the lower flank at r=1.0 are also not to exceed to allowable values for continuous running.

12.3.3.5 Where data from experience or detailed calculations are furnished by manufacturers, allowable axial vibration amplitudes as supplied by the manufacturers may be adopted, subject to approval of the Society.

12.4 WHIRLING VIBRATION

12.4.1 Application

12.4.1.1 For main propulsion shafting systems, the ship-builders or designers are to ensure, so far as practicable, that excessive amplitudes due to whirling vibration throughout the speed range are not to

occur. Otherwise, restricted speed are to be imposed or suitable means for frequency modulation are to be provided as appropriate.

12.4.1.2 For the shelling associated with shaft brackets, shafting with cardan shaft, long span shafting or high-power propulsion shafting, details of the vibration characteristics are to be submitted to the Society for approval.

12.4.2 Whirling vibration calculations

12.4.2.1 Whirling vibration calculations are to include: engine type, rated power, rated speed, shafting arrangement, lengths and positions of bearings, bearing materials, propeller mass and inertia, the resonant speed of 1 order and blade orders forward and backward whirling vibrations.

12.4.2.2 During whirling vibration calculation, bearing stiffness are to be taken into account, and the load distribution on beatings is also to be considered.

12.4.3 Speed ranges to he avoided

12.4.3.1 For high power propulsion shafting systems, generally, 1 order resonant speeds are to be 20% more than the rated speed, and blade order resonant speeds are not to appear in the range of r = 0.85 ~1.0.

12.4.3.2 For the shafting associated with shaft brackets, shafting with cardan shaft or long-span shafting, resonant speeds of blade orders are generally not to appear in the range of r = 0.85 ~ 1.0.

12.5 ALIGNMENT

12.5.1 Application

12.5.1.1 The shafting of main propulsion installations is to be so aligned as to give reasonable bearing reactions and bending moments under hot conditions. The number and arrangement of bearings are to be reasonable to minimize the effects to shaft alignment due to hull deflection or wear of bearings. When the Society deems necessary, bearing reactions bending moments of shaft under running conditions are to be provided.

12.5.1.2 Where the main propulsion shafting systems having a screwshaft diameter greater than 250mm, the alignment calculations are to be submitted to the Society for approval.

12.5.2 Shaft alignment calculations

12.5.2.1 Shaft alignment calculations are to include: engine type, rated power, rated speed, shafting arrangement, all point loads and their acting positions, positions and lengths of beatings, and the allowable bending moments and shearing forces at the output end flange of diesel engines.

12.5.2.2 The shaft deflection obtained from the reasonable alignment calculation in hot condition, the moments or stresses, the shear forces and the angles at different shaft sections, bearing loads and shafting reaction force influence numbers are to be submitted. Where the method calibrated hydraulic jack is adopted, the jack correction factors of bearings are also to be submitted.

12.5.2.3 The gap and sag values of each couple of flanges of the shafting systems in assembling condition are also to be submitted.

12.5.3 Requirements for shafting alignment

12.5.3.1 For shafting alignment in hot conditions, the following requirements are in general to be satisfied:

a. The maximum bearing loads is not to exceed the allowable bearing specific pressure.
b. The positive reaction at each bearing is to be not less than 20% of the weight of the shaft length between two adjacent spans.
c. The additional bending stress of shafts is not to exceed the value specified.
d. The bending moments and shearing forces applied to the output end flange of diesel engines are not to be more than those as specified by the manufacturers.
e. The difference of reactive forces on fore and aft bearing of the gear wheel is to be not more than 20% of the sum of weight of the shaft length between two bearings and that of the wheel.
f. The angle of the shaft section at the support point of aft stem tube bearing is not exceed the specified value.

12.5.4 Measurements for shafting alignment

12.5.4.1 For shafting alignment calculations to be submitted to the Society for approval, actual measurement is to be made for the check of the shafting alignment. The actual load differences in fitting bearings are, in general, not to exceed ± 20% the calculated values.

CHAPTER 13 STEERING GEAR AND WINDLASSES

13.1 STEERING GEAR

13.1.1 General requirements

13.1.1.1 The requirements of this part apply to the design, construction and testing of steering gear.

13.1.1.2 Consideration will be given to the arrangements which are equivalent to the provisions for the steering gear as specified in this volume.

13.1.1.3 Unless expressly provided otherwise, a relaxation of the requirements for the steering gear of the following ships may be permitted by the Society:

a. Any cargo ships of less than 500 gross tonnage engaged on international voyages;
b. Any cargo ships of less than 1600 gross tonnage engaged solely on non-international voyages.

13.1.1.4 For the purpose of this volume:

a. Main steering gear is the machinery, rudder actuators, the steering gear power units, if any, and ancillary equipment and the means of applying torque to the rudder stock (e. g. tiller or quadrant) necessary for effecting movement of the rudder for the purpose of steering the ship under normal service conditions.
b. Auxiliary steering gear is the equipment other than any pan of the main steering gear necessary to steer the ship in the event of failure of the main steering gear but not including the tiller, quadrant or components serving the same purpose
c. Steering gear power unit is:
   - In the case of electric steering gear, an electric motor and its associated electrical equipment;
   - In the case of electro-hydraulic steering gear, an electric motor and its associated electrical equipment and connected pump;
   - In the case of other hydraulic steering gear, a driving engine and connected pump.
d. Power actuating system is the hydraulic equipment provided for supplying power to turn the rudder stock, comprising a steering gear power unit or units, together with the associated pipes and fittings, and a rudder actuator. The power actuating systems may share common mechanical components, i. e. tiller, quadrant and rudder stock, or components sewing the same purpose.
e. Rudder actuator is the component which converts directly hydraulic pressure into mechanical action to move the rudder.
f. Steering gear control system is equipment by which orders are transmitted from the navigating bridge to the steering gear power units. Steering gear control systems comprise transmitters, receivers, hydraulic control pumps and their associated motors, motor controllers, piping and cables.

g. Maximum ahead service speed is the greatest speed which the ship is designed to maintain in service at sea at her deepest seagoing draught at maximum propeller RPM and corresponding engine MGR.
h. Maximum astern speed is the speed which it is estimated the ship can attain at the designed maximum astern power at the deepest sea-going draught.
i. Maximum working pressure is the maximum expected pressure in the system when steering gear is operated to comply with 13.1.4.2(a).

13.1.2 Plans and documents

13.1.2.1 The following plans and documents are to be submitted to the Society for approval in triplicate:

a. Details of steering gear construction, including documents of strength calculations for component pans and materials selected etc. ;
b. Steering gear hydrostatic power system, including documents of relief valve's setting and delivery capacity etc.

13.1.3 Installation and arrangement

13.1.3.1 The steering gear is to be secured to the seating by fitting bolts in normal, and suitable chocking arrangements are to be provided. The setting is to be of substantial construction.

13.1.3.2 The steering gear compartment is to be:

a. Readily accessible and, as far as practicable, separated from machinery spaces;
b. Provided with suitable arrangements to ensure working access to steering gear machinery and controls. These arrangements are to include handrails and gratings or other non-slip surfaces to ensure suitable working conditions in the event of hydraulic fluid leakage.

13.1.3.3 Suitable operating instructions with a block diagram showing the change-over procedures for actuating systems and control systems of steering gear are to be permanently displayed on the navigating bridge and in the steering gear compartments.

13.1.4 Basic performance

13.1.4.1 Unless the main steering gear is in compliance with 13.1.4.6 or 13.1.11.1, every ship is to be provided with a main steering gear and an auxiliary steering gear. The main steering gear and the auxiliary steering gear are to be so arranged that the failure of one of them will not render the other one inoperative.

13.1.4.2 The main steering gear and rudder stock is to be:

a. Of adequate strength and capable of putting the rudder over from 35°on one side to 35°the other side with the ship at its deepest seagoing draught and running ahead at maximum ahead service

speed and under the same conditions, from 35°either side to 30°the other side in not more than 28s;

b. Operated by power where necessary to meet the requirements of (a) above and in any case when, excluding strengthening for navigation in ice, a rudder stock is over 120 mm diameter in way of the tiller;
c. So designed that they will not be damaged at maximum astern speed; however, this design requirement need not he proved by trials at maximum astern speed and maximum rudder angle.

13.1.4.3 The auxiliary steering gear is to be:

a. Of adequate strength and capable of steering the ship at navigable speed and of being brought speedily into action in an emergency;
b. Capable of putting the rudder over from 15° one side to 15° the other side in not more than 60s with the ship at its deepest seagoing draught and running ahead at one half of the maximum ahead service speed or 7 knots, whichever is the greater;
c. Operated by power where necessary to meet the requirements of (b) above and in any case when, excluding strengthening for navigation in ice, a rudder stock is over 230 mm diameter in way of the tiller.

13.1.4.4 Manually operated gears are only acceptable when the operation does not require an effort exceeding 160 N under normal conditions and their constructions are to ensure that the hand wheels of the gears will not be damaged by counter-forces.

13.1.4.5 Main and auxiliary steering gear power units are to be:

a. Arranged to re-start automatically when power is restored after a power failure;
b. Capable of being brought into operation from a position on the navigating bridge;
c. In the event of a power failure to any one of the steering gear power units, an audible and visual alarm is to be given on the navigation bridge.

13.1.4.6 Where the main steering gear comprises two or more identical power units, an auxiliary steering gear need not be fitted, provided that:

a. In a passenger ship, the main steering gear is capable of operating the rudder as required in 13.1.4.2(a) while any one of the power units is out of operation;
b. In a cargo ship, the main steering gear is capable of operating the rudder as required in 13.1.4.2 (a) while operating with all power units;
c. The main steering gear is so arranged that after a single failure in its piping system or in one of the power units the defect can be isolated so that steering capability can be maintained or speedily regained.

13.1.4.7 Steering gears, other than that of the hydraulic type, are to achieve the equivalent standards and to the satisfaction of the Society.

13.1.4.8 A means of communication is to be provided between the navigation bridge and the steering gear compartment.

13.1.4.9 Steering gears are to be provided with positive rudder angle limiters. Power-operated steering gears are to be fitted with limit switches or similar devices, for stopping the gear before the rudder stops are reached. These arrangements are to be synchronized with the gear itself and not with the steering gear control.

13.1.4.10 A brake arrangement is to be fitted to the steering gear to keep the rudder steady.

13.1.5 Materials

13.1.5. 1 All the steering gear components such an hydrostatic cylinders, pressure housings of rotary vane type actuators, hydraulic power piping, valves, flanges and fittings, and all components transmitting mechanical forces to the rudder stock (such as tillers, quadrants, or similar components) are to be of steel or other ductile material approved by the Society, duly tested in accordance with the requirements of the Rules for Materials and Welding by the Society. In general, such material is to have an elongation of not less than 12%, nor a tensile strength in excess of 650 N/mm^2. Subject to agreement of the Society, consideration will be given to the acceptance of grey cast iron for the parts only with low stress levels.

13.1.5.2 Where flexibility hose is required to be installed, the hose assemblies are to be approved by the Society between two points but they are not to be subjected to torsional deflection (twisting) under normal operating conditions. In general, the hose should be limited to the length necessary to provide for flexibility and for proper operation of machinery.

13.1.5.3 Hoses are to be high pressure hydraulic hoses fabricated according to recognized standards and suitable for the fluids, pressures, temperatures and ambient conditions in question.

13.1.5.4 Burst pressure of hoses is to be not less than four times the design pressure.

13.1.6 Construction and design

13.1.6.1 The strength of steering gear components, subject to internal pressure, are to be designed in accordance with the relevant requirements of Chapter for Class I pressure vessels, in addition to the permissible stress specified in this part.
Accumulators, if fitted, are to comply with the relevant requirements of Chapter 6 of this part.

13.1.6.2 Where the components subject to pressure are designed in accordance with the requirements of 13.1.6.1, the permissible primary general membrane stress is not to exceed the lower of the following values:

$$\frac{\sigma_b}{A} \text{ or } \frac{\sigma_s}{B}$$

whichever is less.

Where:

σ_b - specified tensile strength of material at ambient temperature, in N/mm^2;

σ_s - specified yield stress or proof stress of the material at ambient temperature, in N/mm^2;

A and B - safety coefficient given by Table 13.1.6.2.

Table 13.1.6.2
Safety coefficient A or B

Safety coefficient	Steel	Cast steel	Nodular
A	3.5	4	5
B	1.7	2	3

13.1.6.3 The welding details and welding procedures are to be approved by the Society. All welded joints within the pressure boundary of steering gear or connecting parts transmitting mechanical loads are to be full penetration type or of equivalent strength.

13.1.6.4 The construction of steering gear components is to be such as to minimize local concentrations of stress.

13.1.6.5 The design pressure for calculations to determine the scantlings of piping and other steering gear components subjected to internal hydraulic pressure is to be at least 1.25 times the maximum working pressure to be expected under the operational conditions specified in 13.1.4.2 (a), taking into account any pressure which may exist in the low-pressure side of the system. The fatigue criteria (see Appendix 1) is to be applied for the design of piping and components, taking into account pulsating pressure due to dynamic loads.

13.1.6.6 All the steering gear components and the rudder stock are to be of sound and reliable construction. Special consideration is to be given to the suitability of any essential component which is not duplicated. Any such essential component, where appropriate, is to be utilized anti-friction bearings such as ball bearings, roller bearings or sleeve bearings which are no be permanently lubricated or provided with lubrication fittings.

13.1.6.7 All steering gear components transmitting mechanical forces to the rudder stock, which are not protected against overload by structural rudder stops or mechanical buffers, are to have a strength at least equivalent to that of the rudder stock in way of the tiller.

13.1.6.8 Oil seals between non-moving parts forming part of external pressure boundary are to be of the metal upon metal type or of an equivalent type. Oil seals between moving parts forming part of the external pressure boundary are to be duplicated, so that the failure of one seal does not render the actuator inoperative. Alternative arrangements providing equivalent protection against leakage may be accepted.

13.1.6.9 Hydraulic power operated steering gear is to be provided with the following:

a. Arrangements to maintain the cleanliness of the hydraulic fluid taking into consideration the type and design of the hydraulic system;
b. A low level alarm for the circulating oil tank of each hydraulic system to give the earliest practicable of hydraulic fluid leakage. Audible and visual alarms are to be given on the navigating bridge and in the machinery space where they can be readily observed;
c. A fixed storage tank having sufficient capacity to recharge at least one power actuating system including the circulating oil tank, where the main steering gear is required to be power operated. The storage tank is to be permanently connected by piping in such a manner that the hydraulic systems can be readily recharged from a position within the steering gear compartment and provided with a contents gauge.

13.1.6.10 For hydraulic power steering gear with non-duplicated units, isolating valves are to be fitted at the connection of pipes to the hydraulic cylinders, and are to be directly fitted on the hydraulic cylinders.

13.1.6.11 Arrangements for bleeding air from the hydraulic system are to be provided, where necessary.

13.1.7 Relief valves

13.1.7.1 Relief valves are to be fitted to any part of the hydraulic system which can be isolated and in which pressure can be generated from the power source or from external forces. The setting of the relief valves is not to exceed the design pressure. The valves are to be of adequate nominal diameter and so arranged as to avoid an undue rise in pressure above the design pressure.

13.1.7.2 Relief valves for protecting any part of the hydraulic system which can be isolated, as required in 13.1.7.1 are to comply with the following:

a. The setting pressure is not to be less than 1.25 times the maximum working pressure.
b. The minimum discharge capacity of the relief valve(s) is not to be less than 110% of the total capacity of the pumps which can deliver through it (them). Under such conditions the rise in pressure is not to exceed 10% of the setting pressure. In this regard, due consideration is to be given to extreme foreseen ambient conditions in respect of oil viscosity.

13.1.8 Steering gear control systems

13.1.8.1 Steering gear control is to be provided:

a. For the main steering gear, both on the navigating bridge and in the steering gear compartment;
b. Where the main steering gear is arranged according to 13.1.4.6, by two independent control systems, both operable from the navigating bridge. This does not require duplication of the steering wheel or steering lever. Where the control system consists of a hydraulic telemotor, a second independent system need not to be fitted, except in a tanker of 10000 gross tonnage and upwards, a chemical carrier or a liquefied gas carrier;
c. For the auxiliary steering gear, in the steering gear compartment and, if power operated, it is also to be operable from the navigating bridge and is to be independent of the control system for the main steering gear.

13.1.8.2 Main and auxiliary steering gear control systems operable from the navigating bridge are to comply with the following:

a. Means are to be provided in the steering gear compartment for disconnecting any control system operable from the bridge from the steering gear it serves.
b. The system is to be capable of being brought into operation from a position on the navigation bridge.

13.1.8.3 The angular position of the rudder is to be:

a. If the main steering gear is power operated, indicated on the navigating bridge. The rudder angle indication is to be independent of the steering gear control system;
b. Recognizable in the steering gear compartment.

13.1.8.4 Appropriate operating instructions with a block diagram showing the change-over procedures for steering gear control systems and power actuating systems are to be permanently displayed in the wheelhouse and in the steering gear compartment.

13.1.8.5 Source of electrical power and cable installation

a. Means for indicating that motors of electric and electrohydraulic steering gear are running is to be installed on the navigation bridge and at a suitable main machinery control position.
b. Each electrical or electrohydraulic steering gear comprising one or more power units is to be served by at least two exclusive circuits fed directly from the main switchboard, however, one of the circuits may be supplied through the emergency switchboard. Each power unit of electrical or electrohydraulic main steering gear complying with the requirements of 13.1.4.6 is to be served by one exclusive circuit fed directly from the main switchboard, and one of the afore-mentioned circuits may be fed from the emergency switchboard. An auxiliary electric or electrohydraulic steering gear associated with a main electrical or electrohydraulic steering gear may be connected to one of the circuits supplying this main steering gear. The circuits supplying an electrical or

electrohydraulic steering gear are to have adequate rating for supplying all motors which can be simultaneously connected to them and may be required to operate simultaneously.

c. When in a ship of less than 1,600 gross tonnage an auxiliary steering gear which is required in 13. 1.4.3(c) to be operated by power is not electrically powered or is powered by an electrical motor primarily intended for other services, the main steering gear may be fed by one circuit from the main switchboard.

d. Each main and auxiliary steering gear control system, if electrical and operable from the navigating bridge, is to be served by its own separate circuit supplied from a steering gear power circuit from a point within the steering gear compartment. Or alternatively, this control system may be supplied by a separate circuit directly from the same section of main or emergency switchboard bus—bars at a point on the switchboard adjacent to that supplying the said steering gear power circuit.

e. The electrical power circuits and the steering gear control systems with their associated components, cables and pipes required in this Section are to be separated as far as practicable throughout their length.

13.1.9 Emergency power

13.1.9.1 Where the rudder stock is required to be over 230 mm diameter in way of the tiller, excluding strengthening for navigation in ice, an alternative power supply, sufficient at least to supply the steering gear power unit which complies with the requirements of 13.1.4.3(b) and also its associated control system and the rudder angle indicator, is to be provided automatically, within 45s, either from the emergency source of electrical power or frown an independent source of power located in the steering gear compartment. This independent source of power is to be used only for this purpose. In every ship of 10,000 gross tonnage and upwards, the alternative power supply is to have a capacity for at least 30 min of continuous operation and in any other ship for at least 10 min.

13.1.9.2 Where the alternative power source for steering gear is an independent engine driven hydraulic pump located in the steering gear compartment, automatic starting arrangements for the engine are to comply with the relevant requirements relating to the automatic starting arrangements of emergency generators.

13.1.10 Monitoring and alarms

13.1.10.1 All alarms associated with steering gear faults are to be indicated on the navigating bridge and in accordance with the alarm system specified in these regulation. Alarms and monitoring requirements of steering gear are indicated in Table 13.1.10.1

Table 13.1.10.1
Alarm requirements

	Item	Alarm	Note
1	Power of steering gear power units	Failure	----
2	Steering gear circuits and motors	Failure of any one of the supply phases, overload	Running indication on bridge and machinery control station while each motor operating
3	Steering gear hydraulic oil tank level	Failure	-----
4	Rudder position	Low	Each tank to be monitored
5	Auto pilot	----	Indication, see 13.1.8.3
6		Failure	Running indication
7	Hydraulic oil temperature	High	Fitted in way of oil cooler
8	Hydraulic oil filter differential pressure	High	Fitted in way of oil filter

13.1.10.2 Short circuit protection and an overload alarm are to be provided for the circuits and motors referred to in 13.1.8.5(b). Protection against excess current, including starting current, if provided, is to be for not less than twice the full load current of the motor or circuit so protected, and is to be arranged to permit the passage of the appropriate starting currents. Where a three-phase supply is used, an alarm is to be provided that will indicate failure of any one of the supply phases. The alarms required in this Article are to be both audible and visual and are to be situated in a conspicuous position in the main machinery space or control room from which the main machinery is normally controlled. Audible and visual alarms are also required to be provided on the navigation bridge.

13.1.10.3 For any main and auxiliary steering gear control system operable from the navigation bridge an audible and visual alarm is to be given on the navigation bridge in the event of failure of electrical power supply to the control system, or in the event of a power failure to any one of the steering gear power units.

13.1.10.4 When in a ship of less than 1,600gross tonnage an auxiliary steering gear which is required in 13.1.8.5(c) is powered by an electrical motor primarily intended for other services, the requirements of 13.1.10.2 may be waived by the Society if satisfied with protection arrangement together with the requirements of 13.1.4.5 and 13.1.8.1(c) applicable to auxiliary steering gear.

13.1.10.5 For any main and auxiliary steering gear control system operable from the navigation bridge, short circuit protection only is to be provided for steering gear control supply circuits.

13.1.11 Additional requirements

13.1.11.1 For every oil tanker, chemical carrier and liquefied gas carrier of 10,000 gross tonnage and upwards, every other ship of 70,000 gross tonnage and upwards the main steering gear is to comprise two or more identical power units complying with the provisions of 13.1.4.6.

13.1.11.2 For every oil tanker, chemical carrier and liquefied gas carrier of 10,000 gross tonnage and upwards, in addition to the requirements specified in 13.1.11.3, the steering gear is to comply with the following requirements:

a. The main steering gear is to be so arranged that in the event of loss of steering capability due to a single failure in any part of one of the power actuating systems of the main steering gear, excluding the tiller, quadrant or components serving the same purpose, or seizure of the rudder actuators, steering capability is to be regained in not more than 45s after the loss of one power actuating system.
b. The main steering gear is to comprise either:
   - Two independent and separate power actuating systems, each capable of meeting the requirements of 13.1.4.2(a); or
   - At least two identical power actuating systems which, acting simultaneously in normal operation, are capable of meeting the requirements of 13.1.4.2(a). Where necessary to comply with these requirements, inter-connection of hydraulic power actuating systems is to be provided. Loss of hydraulic fluid from one system is to be capable of being detected and the defective system automatically isolated so that the other actuating system or systems remain fully operational;
   - Steering gears other than of the hydraulic type are to achieve equivalent standards.

13.1.11.3 For every oil tanker, chemical carrier and liquefied gas carrier of 10,000 gross tonnage and upwards but of less than 100,000 tons deadweight, solutions other than those set out in 13.1.11.2 which need not apply the single failure criterion to the rudder actuator or actuators, may be permitted provided that an equivalent safety standard is achieved and that:

a. Following loss of steering capability due to a single failure of any part of the piping system or in one of the power units, steering capability is regained within 45s;
b. Where the steering gear includes only a single power actuator, special consideration is given to stress analysis for the design including fatigue analysis and fracture mechanics analysis, as appropriate, the material used, the installation of sealing arrangements and the testing and inspection and provision of effective maintenance.

13.1.11.4 Manufacturers of steering gear who intend their product to comply with the requirements of Appendix 1 are to submit corresponding information subject to approval by the Society.

13.1.12 Non-destructive testing

13.1.12.1 The rudder actuator is to be subjected to suitable and complete non-destructive testing to detect both surface flaws and volumetric flaws. The procedure and acceptance criteria for non-destructive testing is to be approved by the Society. If found necessary, fracture mechanics analysis may be used for determining maximum allowable flaw size.

13.1.13 Testing

13.1.13.1 All pressure parts are to be subjected to a hydrostatic test at 1.5times the design pressure.

13.1.13.2 Each type of the hydrostatic power steering gear units and power units is to be subjected to type test and work shop test. Tests are to be carried out under the supervision of the surveyor and to be in accordance with the standard recognised by the Society.

13.1.13.3 On completion of installation on board, the hydraulic power steering gear is to be subjected to a hydrostatic test for tightness to 1.25 times the design pressure.

13.1.14 Trials

13.1.14.1 The steering gear is to be tried out on the trial trip in order to demonstrate to the Surveyor's satisfaction that the requirements of the Rules have been met. The trial is to include the operation of the following:

a. The steering gear, including demonstration of the performances required in 13.1.4.2(a) and 13.1.4.3(b). For controllable pitchy propellers, the propeller pitch is to be at the maximum design pitch approved for the maximum continuous ahead R.P.M. at the main steering gear trial. If the vessel cannot be tested at the deepest draught, alternative trial conditions may be specially considered. In this case for the main steering gear trial, the speed of ship corresponding to the number of maximum continuous revolution of main engine could apply;
b. The steering gear power units, including transfer between steering gear power units;
c. The isolation of one power actuating system, checking the time for steering capability;
d. The hydraulic fluid recharging system;
e. The emergency power supply required in 13.1.9.1;
f. The steering gear controls, including transfer of control and local control;
g. The means of communication between the wheelhouse, engine room, and the steering gear compartment;
h. The alarms and indicators required in this Chapter;
i. Where steering gear is designed to avoid hydraulic locking this feature is to be demonstrated.

The trials in (b), (c), (d), (g), (h) and (i) above may be carried out during mooring trial.

Appendix 1[1]

Guidelines for the acceptance of non-duplicated rudder actuators for tankers, chemical tankers and gas carries of 10,000 gross tonnage and upwards but of less than 100 000 tons deadweight

1.1 Materials

1.1.1 Parts subject to internal hydraulic pressure or transmitting mechanical forces to the rudder-stock are to be made of duly tested ductile materials complying with recognized standards. Materials for pressure retaining components are to be in accordance with recognized pressure vessel standards. These materials are not to have an elongation less than 12per cent nor a tensile strength in excess of 650 N/mm^2.

1.2 Design

1.2.1 Design pressure The design pressure should be assumed to be at least equal to the greater of the following:

a. 1.25 times the maximum working pressure to be expected under the operating conditions required in 13.1.4.2 (a).
b. The relief valve(s) setting.

1.2.2 Analysis in order to analyse the design, the following are required:

a. The manufacturers of rudder actuators should submit detailed calculations showing the suitability of the design for the intended service.
b. A detailed stress analysis of pressure retaining parts of the actuator should be carried out to determine the stresses at the design pressure.
c. Where considered necessary because of the design complexity or manufacturing procedures, a fatigue analysis and fracture mechanics analysis may be required. In connection with these analyses, all foreseen dynamic loads should be taken into account. Experimental stress analysis may be required in addition to, or in lieu of, theoretical calculations depending upon the complexity of the design.

1.2.3 Allowable stresses for the purpose of determining the general scantlings of parts of rudder actuators subject to internal hydraulic pressure the allowable stresses should not exceed:

$$\sigma_m \leqslant f$$

$$\sigma_1 \leqslant 1.5f$$

$$\sigma_n \leqslant 1.5f$$

$$\sigma_1 + \sigma_n \leqslant 1.5f$$

$$\sigma_m + \sigma_n \leqslant 1.5f$$

[1] It is the Resolution A.467(XII) of IMO

Where:

σ_m - equivalent primary general membrane stress, in N/mm^2

σ_1 - equivalent primary local membrane stress, in N/mm^2

σ_n - equivalent primary bending stress

f - the lesser of $\frac{\sigma_b}{A}$ or $\frac{\sigma_s}{B}$

σ_b - specified minimum tensile strength of material at ambient temperature, in N/mm^2

σ_s - specified minimum yield stress or proof stress of material at ambient temperature, in N/mm^2

A and B are as Table 1.2.3

Table 1.2.3

Numerical value	Wrought steel	Cast steel	Nodular
A	4	4.6	5.8
B	2	2.3	3.5

1.2.4 Burst test

a. Pressure retaining parts not requiring fatigue analysis and fracture mechanics analysis may he accepted on the basis of a certified burst test and the detailed stress analysis required in 1.2.2 need not be provided.

b. The minimum busting pressure should be calculated as follows:

$$P_b = PA\frac{\sigma_{ba}}{\sigma_b} \qquad \text{MPa}$$

Where:

P_b - minimum bursting pressure, in MPa;

P - design pressure as defined in 1.2.1, in MPa;

A - as from table in 1.2.3;

σ_{ba} - actual tensile strength, in N/mm^2;

σ_b - tensile strength as defined in.1.2.3, in N/mm^2.

1.3 Construction details

1.3.1 The construction should be such as to minimize local concentrations of stress.

1.3.2 The welding details and welding procedures should be approved.

1.3.3 All welded joints within the pressure boundary of a rudder actuator or connection parts transmitting mechanical loads should he full penetration type or of equivalent strength.

1.3.4 Oil seals forming part of the external pressure boundary are to comply with 13.1.6.8.

1.3.5 Isolating valves are to be fitted at the connection of pipes to the actuator, and should be directly mounted on the actuator.

1.3.6 Relief valves for protecting the rudder actuator against over-pressure as required in 13.1.7.1 are to comply with the following:

a. The setting pressure is not to be less than 1.25 times the maximum working pressure expected under operating conditions required in 13.1.4.2(a).
b. The minimum discharge capacity of the relief valve(s) is to be not less than 110% of the total capacity of all pumps which provided power for the actuator. Under such conditions the rise in pressure should not exceed 10% of the setting pressure. In this regard due consideration should be given to extreme foreseen ambient conditions in respect of oil viscosity.

1 .4 Non-destructive testing

1.4.1 The rudder actuator should be subjected to suitable and complete non-destructive testing to detect both surface flaws and volumetric flaws.

1.4.2 The procedure and acceptance criteria for non-destructive testing should be in accordance with requirements of recognized standards. If found necessary, fracture mechanics analysis may be used for determining maximum allowable flaw size.

1.5 Testing

1.5.1 Tests, including hydrostatic tests, of all pressure parts at 1.5 times the design pressure should be carried out.

1.5.2 When installed on board the ship, the rudder actuator should be subjected to a hydrostatic test and a running test.

13.2 WINDLASSES

13.2.1 Definitions

13.2.1.1 For the purpose of this part: working load means the tension measured at wildcats, and is to be calculated in accordance with 13.2.3.3(a).
Overload pull means the capability of the windlass necessary to withstand an overload pull for a short time.
Mean speed means the speed for raising two length of cable chains are in the water with the anchor hanged free.
Withstand load means the maximum static load applied to chain cables which the windlass brake can withstand.

13.2.2 Plans and documents

13.2.2.1 The following plans and documents are to be submitted to the Society for approval:

a. Details of Windlass construction, including documents of strength calculations for principal component parts and material selected etc.;
b. Windlass power system.

13.2.3 General requirements

13.2.3.1 Windlasses are to be driven by prime movers or motors independent from other deck machinery. For hydraulic windlasses, the hydraulic pipes may be connected with the pipes for other deck machinery, provided that there is no interference to the operation of windlasses. Where applicable, hand-operated windlasses may be accepted for ships having anchors of not more than 250 kg, and provision is to be made for prevention of injuring persons by handles.

13.2.3.2 Power-operated windlasses are to be reversible.

13.2.3.3 Windlasses are to be of sufficient power and are to be capable of working continuously, the working load and overload pull of which are to meet the following requirements:

a. Windlasses are to be capable of working continuously for period of 30 min al the mean speed as required in 13.2.3.4, the working load of which is:

For Class A1 Stud link chains $37.5\ d^2$ N;
For Class A2 stud link chains $42.5\ d^2$ N;
For Class A3 stud link chains $47.5\ d^2$ N.

Where:
d — the chain diameter, in mm.

b. Windlasses are to be capable of working continuously for a period of 2 min under an overload pull (without any requirements for hoisting speed) of not less than 1.5 times the working load.

13.2.3.4 In carrying out the trial of hoisting anchor by the windlass, a mean speed of hoisting one anchor from a depth of 82.5 m to a depth of 27.5 m is not to be less than 9 m/min. Where the depth of water in trial areas is inadequate, consideration may be given to the use of other suitable methods.

13.2.4 Protection and braking equipment

13.2.4.1 Windlasses are to be provided with a clutch located between the wildcat and driving shaft, and the clutches are to be provided with efficient locking devices.

13.2.4.2 The wildcats or reels of windlasses are to be provided with efficient brakes, and the brakes, when fully applied, are to be able to withstand a static pull of 45% of the breaking load of the cable or wine or a

maximum static load of the cable. Parts bearing forces will not be permanently deformed and no slip will be found for the brakes.

13.2.4.3 Windlasses are to be fitted with efficient stoppers which are to be subjected to loads equivalent to the proof test load of chain cables and of which the stress is not to be more than 90% of yield stress of the material used.

13.2.4.4 Prime movers and transmission gears are to be provided with means for prevention of excessive moment and impact.

13.2.4.5 In addition to the requirements mentioned above, the hydraulic system of windlasses is to comply with the relevant requirements of 2.5 and 4.7 of this volume.

CHAPTER 14 STRENGTHENING FOR NAVIGATION IN ICE

14.1 GENERAL REQUIREMENTS

14.1.1 General requirements

14.1.1.1 For ships intended for Ice Classes B1*, B1, B2 or B3, the machinery installations are to additionally comply with the provisions of this Chapter.

14.1.1.2 For ships intended for Ice Classes B1*, B1, B2 or B3, the machinery installations are to be able to assume safe and normal operation under air temperatures below 0°C. Particular attention is to be paid to the functioning of hydraulic systems, hazard of freezing of water piping and tanks, starting of emergency diesels at low temperatures.

14.1.2 Main engine output

14.1.2.1 The main engine output mentioned in this Chapter is the maximum continuous output of the propulsion machinery which might be possibly restricted by technical reasons or by some other regulations.

14.1.2.2 The main engine output N_e is to be in no case less than 2600 kW for Ice Class B1* and less than 740 kW for Ice Classes B1, B2 and B3.

a. For B1* and B1, the main engine output is to be not less than that determined by the formula below:

$$N_e = k_e \frac{\left(\frac{R_{CH}}{1000}\right)^{3/2}}{D_p} \quad kW$$

Where:

D_p —diameter of propeller, in m;

K_e—propulsion coefficient, to be taken as below:

Table 14.1.2.2(I)
Propulsion coefficient K_e

Number of propellers	Type of propeller	
	Controllable pitch propeller	Fixed pitch propeller
1	2.03	2.26
2	1.44	1.6
3	1.18	1.31

R_{CH} —resistance of the ship in a channel with brash ice and a consolidated layer, in N, determined by the formula below:

$$R_{CH} = C_1 + C_2 + 845(H_F + H_M)^2 \left(B + 1.85H_F - \frac{2H_F}{\tan y}\right)$$

$$(0.15\cos j_2 + \sin y \sin a) + 42L_{PAR}H_F^2 + 825\left(\frac{L_{WL}T_{ICE}}{B^2}\right)^3\left(\frac{A_{WF}}{L_{WL}}\right)$$

Where C_1 and C_2 are coefficients taking into account a consolidated upper layer of the brash ice and taken as zero for B1; for B1*:

$$C_1 = 23\frac{BL_{PAR}}{\frac{2T_{ICE}}{B}+1} + (1+0.021j_1)(45.8B + 14.7_{BOW} + 29BL_{BOW})$$

$$C_2 = (1+0.063j_1)(1530+170B) + \left(400 + 480\frac{T_{ICE}}{B}\right)\frac{B^2}{\sqrt{L_{WL}}}$$

$$H_F = 0.26 + \sqrt{(H_M B)}, \; H_M = 1.0 \text{ for B1* and B1;}$$

$\left(\frac{L_{WL}T_{ICE}}{B^2}\right)^3$ is to be not greater than 20 or less than 5;

For a ship with a bulbous bow, $\ddot{o}_1$=90°;

$$\Psi = \arctan\left(\tan j^{\,2}\right)$$

A_{WF}—area of summer fresh waterline of the bow, in m^2, see Figure 14.1.2.2,
B — moulded breadth of the ship, in m;
H_M —thickness of the brash ice in mid channel, in m;
H_F —thickness of the brash ice layer displaced by the bow, in m;
L_{BOW} —length of the bow, in m;
L_{PAR} —length of the parallel midship body, in m;
L_{WL} —length of the ship on the summer freshwater load line, in m;
T_{ICE} —maximum midlength ice class draught of the ship corresponding to summer freshwater load line, in m;
á —angle of summer fresh waterline at B/4, in degrees, see Figure 14.1.2.2;
$\ddot{o}_1$ — rake of the stem at the centerline, in degrees, see Figure 14.1.2.2;
$\ddot{o}_2$ —rake of the bow at B/4, in degrees, see Figure 14.1.2.2.

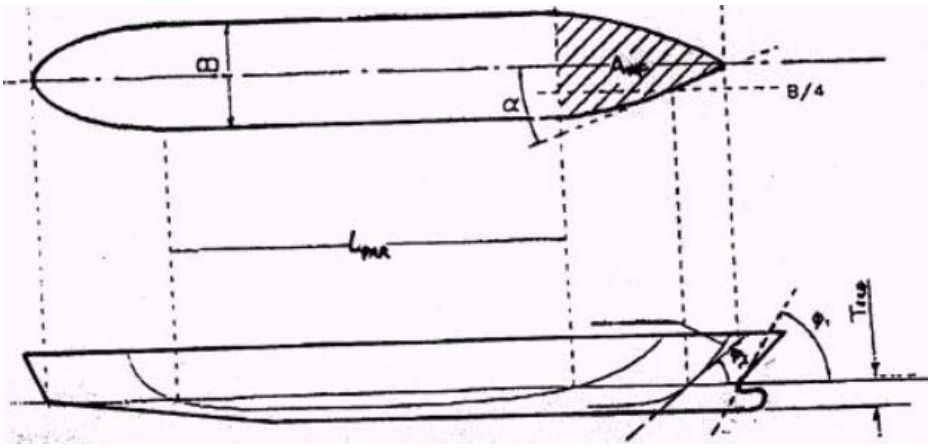

Figure 14.1.2.2

b. For B2 and B3, the main engine output is to be not less than that determined by the formula below:

$$N_e = f_1 f_2 f_3 (f_4 \Delta + N_o) \qquad kW$$

Where:
—displacement at the ice load waterline (corresponding to summer freshwater load line), in tones, whichever is greater in case of dual ice classes, but not greater than 80,000 t,
f_1 = 1.0 —controllable pitch propeller;
f_2 = 0.9 fixed pitch propeller;

$f_2 = \frac{a}{200} + 0.675$ For a ship without a bulbous bow, but not greater than 1.1, the product of f_1 and f_2 is not less than 0.85, á being the rake of the stern relative to waterline;

f_2 = 1.1 —for a ship with a bulbous bow;
f_3 = 1.2 B/ $^{1/3}$, but not less than 1.0, B being breadth of the ship, in m;
f_4 and N_0 —as given in Table 14.1.2.2(2).

Table 14.1.2.2(2)
Values of f_4 and N_0

	B2	B3	B2	B3
t	< 3000		<3000	
f_4	0.22	0.18	0.13	0.11
N_0	370	0	3070	2100

14.1.3 Ice torque

14.1.3.1 Dimensions of propellers, shafting and gearing are determined by formulae taking into account the impact when a propeller blade hits ice. The ensuing load is hereinafler defined by ice torque:

$$Y = CD^2 \qquad \text{kN} \cdot \text{m}$$

Where:
D - diameter of propeller, in m;
C - coefficient, as given in Table 14.1.3.1.

If the propeller is not submerged when the ship is in ballast condition, the ice torque Y for Ice Class B1 is to be used for Ice Classes B2 and B3.

Table 14.1.3.1
Coefficent C

Ice class notation	C
B1	21.20
B1	15.70
B2	13.05
B3	11.97

14.1.4 Materials for drafting

14.1.4.1 All components of the main propulsion shafting and propellers are to be made of steel or other approved ductile materials, and are to comply with the relevant provisions of the Rules for Materials and Welding by the Society.

14.1.4.2 For ships intended for Ice classes B1* and B1, the screwshafts are to be subject to V-notch type impact test at -10 °C and the mean value of impact energy is not to be less than 27J.

14.2 SHAFTING

14.2.1 Intermediate and thrust shafts

14.2.1.1 The diameters of intermediate shafts and thrust shafts in external bearings are to comply with the provisions of 11.2.2, except for class B1 ice strengthening where these diameters are to be increased by 10% respectively.

14.2.2 Screwshafts

14.2.2.1 The diameter d_c at the aft bearing of the screwshaft fitted in conjunction with a solid propeller is to be not less than:

$$d_c = 1.08\sqrt[3]{\frac{\sigma_b b t^2}{\sigma_s}} \quad \text{mm}$$

Where:
σ_b - tensile strength of the blade material, in N/mm^2;
b - designed width of the propeller blade section at 0.25 R , in mm;
t - designed thickness of the propeller blade section at 0.25 R , in mm;
σ_s - yield stress of the material of screwshaft, in N/mm^2.

14.2.2.2 The diameter, d_c at the aft bearing of the screw-shaft fitted in conjunction with a controllable pitch propeller is to be not less than:

$$d_c = 1.15\sqrt[3]{\frac{\sigma_b b t^2}{\sigma_s}} \quad \text{mm}$$

Where:
σ_b and σ_s are same as 14.2.2.1;
b – designed width of the propeller blade section at 0.35 R , in mm;
t - designed thickness of the propeller blade section at 0.35 R , in mm.

14.2.2.3 Where the screwshaft diameter derived by 14.2.2.1 or 14.2.2.2 is less than the diameter derived by 11.2.2.1, the greater is to apply.

14.2.2.4 The screwshaft may be tapered at the forward end, but the minimum diameter is not to be less than that derived by 11.2.2.1.

14.2.3 Reduction gearing

14.2.3.1 Where reduction gearing is fitted between the main engine and the propulsion shafting, the gearing is, in addition to complying with the requirements of Chapter 10, to be designed to transmit a torque M_i determined by the following formula:

$$M_i = M_e + \frac{Y J_h i^2}{J_i + J_h i^2} \quad \text{kN} \cdot \text{m}$$

Where:

$$M_e = 9.55\frac{N_e}{n_e} \quad \text{kN} \cdot \text{m};$$

N_e – power of main engine, as defined in 14.1.2, in kW;
n_e— propeller speed at N_e , in r/min;
Y— ice torque, kN*m, as defined in 14.1.3;
i – gear ration to be equal to pinion speed/wheel speed;
J_h – mass moment of inertia of machinery components rotating at higher speed (input end);
J_i - mass moment of inertia of machinery components rotating at lower speed (output end), including propeller with an addition of 30% for entrained water. (J_h and J_i are to be expressed in the same units).

14.3 PROPELLERS

14.3.1 Materials for propellers

14.3.1.1 Propellers and propeller blades are to be of cast steel or copper alloys.

14.3.1.2 For steel propellers, the elongation of material used is not to be less than 19% for a test piece with a length of 5d, and the impact value for Charpy V-notch teats is not to be less than 2 J at -10 °C.

14.3.2 Thickness of propeller blades

14.3.2.1 The thickness of propeller blades t (at 0.25R and 0.6R for solid propellers, and at 0.35 R and 0.6R for controllable pitch propellers) is not to be less than that calculated by the following formula:

$$t = \sqrt{\frac{K_1}{b\sigma_b(0.65 + 0.7P/D)}\left(K_2\frac{N_e}{Zn} + K_3 Y\right)} \quad \text{mm}$$

Where:

K_1, K_2, K_3 - coefficients given in Table 14.3.2.1;

b - blade width at the radius in question, in In;

σ_b - tensile strength of the propeller blade material, in N/n1n'l2;

P - pitch at the radius in question, in m; for controllable pitch propellers, 0.7 P is substituted for P;

D — propeller diameter, in m;

N_e - rated power of main engine, in kW;

Z - number of blades;

n - rotational speed of propeller at N_e, in r/min;

Y— ice torque determined by 14.1.3, in kN*m.

Table 14.3.2.1
Coefficient K_1, K_2, K_3

R k	K_1	K_2	K_3
0.2 R	26487	27.2	2.21
35 R	21092	27.2	2.34
0.6 R	9320	27.2	2.85

14.3.2.2 The blade tip thickness t is not to be less than the value obtained by the following formulae:

$$t = (20 + 2D)\sqrt{\frac{491}{\sigma_b}} \quad \text{mm}$$

For lee Class B1, B2 and B3:

$$t = (15 + 2D)\sqrt{\frac{491}{\sigma_b}} \quad \text{mm}$$

Where:
D, σ_b see 14.3.2.1.

14.3.2.3 Where the propeller thickness derived from the above formulae is less than that derived by 11.4.3, the greater is to apply.

14.3.2.4 The thickness of other sections of the propeller blade is to conform to a smooth curve connecting the section thicknesses as derived from the above formulae.

14.3.2.5 The thickness of blade edges is not to be less than 50% of the required blade tip thickness t, measured at 1.25 t from the edge. For controllable pitch propellers, this requirement need only be applied to the leading edges of the blades.

14.3.3 Miscellaneous

14.3.3.1 The strength of mechanism in the boss of a controllable pitch propeller is to be 1.5 times that of the blade when a load is applied at the radius 0.9 R in the weakest direction of the blade.

14.4 STARTING ARRANGEMENTS AND COOLING WATER SYSTEM

14.4.1 Starting arrangements

14.4.1.1 The capacity of the air receivers is to comply with the provisions of 9.5.3.2. If the air receivers serve any other services than starting the propulsion engine, their capacity is to be adequately increased.

14.4.1.2 The capacity of the air compressors is to comply with the provisions of 9.5.2.1. If the ship is intended for Ice Class B1* and its propulsion engine is of reversible type, the charging time specified in 9.5.2.1 is to be not more than 0.5 h.

14.4.2 Cooling water system

14.4.2.1 The cooling water system is to be designed to ensure supply of cooling water when navigating in ice. For this purpose at least one cooling water inlet chest is to be arranged as follows:

a. The sea inlet is to be situated near the centerline of the ship and well aft if possible.
b. The chest is to have a sufficient volume. As a guidance for design, the volume of the chest is to be about one cubic metre for every 750 kW of engine output of the ship including the output of the auxiliary engines necessary for the ship's service.
c. The chest is to be sufficiently high to allow ice to accumulate above the inlet pipe.
d. A pipe, being of the same diameter as the cooling water discharge pipe, is to be connected between the chest and the cooling water discharge pipe.
e. The area of the strum holes is to be not less than 4 times the inlet pipe sectional area.

14.4.2.2 If there are difficulties to meet the requirements of 14.4.2.1(b) and (c), two smaller chests may be arranged, but they must comply with the requirements of 14.4.2.1(a) to (e).

14.4.2.3 Heating coils may be installed in the upper part of the chest or chests where necessary.

14.4.2.4 Arrangements for using ballast water for cooling purposes may be used as a reserve in ballast condition but can not be accepted as a substitute for sea inlet chests as described above.

CHAPTER 15: SPARE PARTS

15.1 GENERAL REQUIREMENTS

15.1.1 General requirements

15.1.1.1 The requirements of this Chapter apply to the spare parts for machinery installations on board ships intended for unrestricted service.

15.1.1.2 In ships with multi-engine propulsion installations, spare parts need only be carried for one main engine.

15.1.1.3 Table 15.2.1.2, 15.2.1.4 and items for auxiliary steam turbines specified in Table 15.2.1.3 are applicable to spare parts required for each type of machinery. Where more generators and air compressors than those required in the Rules are fitted, no spare parts are required.

15.2 NUMBER OF SPARE PARTS

15.2.1 Tables of spare parts

15.2.1.1 Spare parts for main diesel engines are shown in Table 15.2.1.1.

15.2.1.2 Spare parts for auxiliary diesel engines are shown in Table 15.2.1.2.

15.2.1.3 Spare parts for main and auxiliary steam turbines are shown in Table 15.2.1.3.

15.2.1.4 Spare parts for independently driven air compressors are shown in Table 15.2.1.4.

15.2.1.5 Spare parts for main boilers and auxiliary boilers for essential services are shown in Table 15.2.1.5.

15.2.1.6 Spare parts for pumps are shown in Table 15.2.1.6.

15.2.1.7 Spare parts for shafting are shown in Table 15.2.1.7.

Table 15.2.1.1
Spare parts for main diesel engines

Item	Spare parts	Number required
Main bearings	Main bearings or shells for one bearing of each size and type fitted, complete with shims, volts and nuts	1
Main thrust block	Pads for one face of Michell type thrust block or inner and outer race with rollers where roller thrust bearings are fitted	1 set
Cylinder liner	Cylinder liner, complete with joint rings and gaskets	1
Cylinder cover	Cylinder cover, complete with valves, joint, rings and gaskets; for engines without covers , the repective valves for one cylinder unit	1
	Cylinder cover studs or volts, with nuts, as applicable for one cylinder	1/2 set

Table 15.2.1.1 (cont)

Spare parts for main diesel engines

Item	Spare parts	Number required
Cylinder valves	Exhaust valves , complete with casings, seats, springs and other fittings for one cylinder	2 sets
	Air inlet valves, complete with casings, seats, and other fittings for one cylinder	1 set
	Starting air valve, complete with casing, seat, springs and other fittings	1
	Relief valve, complete	1
	Fuel injection valves of each size and type fitted, complete with all fittings for one engine	1 set
	Note: Engines with three or more fuel injection valves per cylinder; two fuel valves complete per cylinder, and a sufficient number of valves parts, excluding the body , to provide, with those fitted in the complete valves, a full engine set.	
Connecting rod bearings	Bottom end bearings or Shell of each size and type fitted , complete with shims , volts and nuts for one cylinder	1 set
	Top end bearings or shells of size and type fitted, complete with shims, volts and nuts , for one cylinder	1 set
Piston	Crosshead type:	1
	Piston of each type fitted, complete with position rod, shuffing box, skirt, rings, studs and nuts	
	Trunk piston type:	1
	Piston of each type fitted, complete with skirt, rings, studs, nuts , gudgeon pin and connecting rod	
Piston rings	Piston rings, for one cylinder	1 set
Piston cooling	Telescopic cooling pipes and fittings or their equivalent, for one cylinder unit	1 set
Gear and chain for camshaft drives		1 set

Table 15.2.1.1 (cont)
Spare parts for main diesel engines

Item	Spare parts	Number required
Cylinder lubricators	Lubricator complete, of the largest size , with its chain drive or gear wheels	1
Fuel injection pumps	Fuel pump complete, or when replacement at sea is practicable , a complete set of working parts for one pump (plunger , sleeve, valves, springs, ect.)	1
Fuel injection piping	High pressure fuel pipe of each size and shape fitted, complete with couplings	1
Scavenge blowers	Rotors, rotor shafts, bearings, nozzle rings and gears wheels or equivalent working parts if of other types.	1 set
(including turbochargers)	Note: the spare parts may be omitted where it has been demonstrated at the engine builder's Works, for an engine of the type concerned that the engine can be maneuvered satisfactorily with one blower out of action. The requisite blanking and/ or blocking arrangements, applicable for running with one blower out of action, are to be available on board	
Scavenging system	Suction and delivery valves for one pump of each type fitted	1 set
Reduction and /or reverse gear	Complete bearing brush, of each size fitted in the gear case assembly	1 set
	Roller or ball race of each size fitted in the grease assembly	1 set
Main enginedriven air compressors	Piston rings of each size fitted	1 set
	Suction and delivery valves complete or each size fitted	1/2 sets

Table 15.2.1.2
Spare parts for auxiliary diesel engines

Item	Spare parts	Number required
Main bearings	Main bearings or shells for one bearing of each size and type fitted, complete with shims, volts and nuts	1
Cylinder valves	Exhaust valves , complete with casings, seats, springs and other fittings for one cylinder	2 sets
	Air inlet valves, complete with casings, seats, and other fittings for one cylinder	1 set
	Starting air valve, complete with casing, seat, springs and other fittings	1
	Relief valve, complete	1
	Fuel valves of each size and type fitted, complete with all fittings for one engine	1 set
Connecting rod bearings	Bottom end bearings or Shell of each size and type fitted, complete with shims, volts and nuts for one cylinder	1 set
	Top end bearings or shells of size and type fitted, complete with shims, volts and nuts , for one cylinder	1 set
	Trunk piston type: gudgeon pin with brush for one cylinder	1 set
Piston rings	Piston rings, for one cylinder	1 set
Piston cooling	Telescopic cooling pipes and fittings or their equivalent, for one cylinder unit	1 set
Fuel injection pumps	Fuel pump complete, or when replacement at sea is practicable , a complete set of working parts for one pump (plunger , sleeve, valves, springs, ect.)	1
Fuel injection piping	High pressure fuel pipe of each size and shape fitted, complete with couplings	1
Gaskets and packings	Special gaskets and packings of each size and type fitted for cylinder covers and cylinder liners for one cylinder	1 set

Table 15.2.1.3

Spare parts for auxiliary diesel engines

Item	Spare parts	Number required
Main bearings	Complete bearing brush of size and type fitted, for the rotor, pinion and gear Wheel shafts, for one engine	1
Turbine thrust	Pads of each size for one face of Michell type thrust or rings for turbine adjusting block, of each size fitted one engine assorted liners for 1 block where fitted	1 set
Main thrust block	Pads for one face of Michell type thrust block, or inner and outer race with rollers where roller thrust bearings are fitted	1 set
Turbine shaft sealing rings	Carbon sealing rings, where fitted, with springs , for each size and type of gland, for one engine	1 set
Oil filters	Disposable filter elements of each type and size fitted	1 set

Note: * Only applicable for main steam turbines.

Table 15.2.1.4

Spare parts for independently driven air compressors

Item	Spare parts	Number required
Piston rings	Rings, of each size fitted, for one piston	1 set
Valves	Suction and delivery valves, complete, of each size fitted	1/2 set

Table 15.2.1.5

Spare parts for main boilers and auxiliary boilers for essential services

Item	Spare parts	Number required
Tube stoppers or plugs	Tube Stoppers of plugs, of each size used, for boiler, superheater and economizer tubes	10
Oil fuel bumers	Parts liable to damage of oil fuel bumers for one boiler	1 set
Gauge glasses	Gauge glasses of round type	4 set
	Gauge glasses of flat type	2 set
Safety valves	Springs of each size fitted	1 set

Table 15.2.1.6
Spare parts for pumps

Item	Spare parts	Number required
Reciprocating pumps	Valves with seats and springs of each size fitted	1 set
	Piston rings of each type and size for one piston	1 set
Centrifugal pumps	Bearing of each type and size	1
	Rotor sealings of each type and size	1
Gear and screw type pumps	Bearings of each type and size	1
	Rotor sealings of each type and size	1

Table 15.2.1.6
Spare parts for pumps

Item	Spare parts	Number required
Coupling bolts	Coupling bolts and nuts which are to be disconnected for withdrawing the shaft	1 set

CHAPTER 16: ADDITIONAL REQUIREMENTS FOR MACHINERY INSTALLATIONS OF SMALL SHIPS AND SHIPS IN RESTRICTED SERVICE

16.1 GENERAL REQUIREMENTS

16.1.1 Application

16.1.1.1 The provisions of this Chapter apply to the machinery installations of the following ships and such provisions may substitute those fore-mentioned relevant provisions of this volume:

a. Cargo ships having greater coastal service, coastal service or other equivalent class notions and engaged on non-international voyages;
b. Ships having sheltered water service or other equivalent class notations;
c. Ships of left than 500 gross tonnage.

16.2 ADDITIONAL REQUIREMENTS

16.2.1 Doorways off engine rooms or boiler rooms

16.2.1.1 For ships of less than 500 gross tonnage, the doorways of engine rooms or boiler rooms required in 1.2.1.1 may be fitted with only one ladder and one doorway subject to agreement of the Society.

16.2.2 Boiler arrangement

16.2.2.1 For ships of less than 500 gross tonnage, the clearance between the boilers and the fuel oil tank boundaries required in 1.2.2.2 may be suitably reduced subject to agreement of the Society.

16.2.3 Bilge suction arrangement in machinery space

16.2.3.1 For ships with propelling machinery aft as required in Table 3.3.2.1, where ships are of less than 500 gross tonnage one direct bilge suction may be acceptable.

16.2.3.2 For ships of less than 500 gross tonnage, emergency bilge suction specified in3.3.3.1 may be dispensed with.

16.2.5 Bilge pumps and bilge piping

16.2.5.1 The bilge pumps as required in Table 3.4.1.1, for ships of less than 100 gross tonnage may be modified by one of power driven type and one hand pump.

16.2.5.2 For ships of 25 m or less in length, the internal diameter of branch bilge pipes as specified in 3.4.3.4 may be reduced to 40mm.

16.2.5.3 For ships of 60 m or less in length, the internal diameter of branch bilge pipes to the tunnel wells as specified in 3.4.3.6 may be reduced 50 mm.

16.2.5.4 For ships of less than 500 gross tonnage, the capacity of bilge wells for machinery and boiler spaces and cargo holds as specified in 3.4.8.1 may be suitably reduced but to be not less 0.10 m^3.

16.2.5.5 For ships of less than 100 gross tonnage, the ends of bilge suction in machinery spaces specified in 3.4.8.2 may be fitted with a strum box instead of a mud box.

16.2.6 Air, overflow and sounding pipes

16.2.6.1 For ships of less than 500 gross tonnage, the height of air pipes extending from the freeboard deck or superstructure deck to the point where water may have access below as specified in 3.10.3.3 may be less

than 760 mm or 450 mm respectively subject to agreement of the Society.

16.2.7 Oil burning units of boilers

16.2.7.1 For ships as specified in 16.1.1.1(a) and (b), for auxiliary boilers for essential services or auxiliary boilers supplying steam for heating heavy fuel oil and cargo oil as specified in 4.2.3.2, one oil burning unit will be accepted provided that one complete spare oil burning pump is carried on board and capable of being easily installed and connected.
For cargo ships of less than 500 gross tonnage, only one oil burning unit to be fitted is acceptable.

16.2.8 Oil fuel booster pumps

16.2.8.1 For ships as specified in 16.1.1.1(a) and (b), for oil fuel booster pumps as required in 4.2.4.1, where one complete spare pump capable of being easily installed and connected or a suitable pump connecting to the system is provided, a standby pump may be dispensed with.
For ships of less than 500 gross tonnage, the standby pump as required in 4.2.4.1 may be dispensed with.
For ships having two or more main engines with one complete spare pump to be fitted as required in 4.2.4.1, it may not be applicable to cargo ships of less than 500 gross tonnage.

16.2.9 Feed water pumps for boilers

16.2.9.1 For ships as specified in 16.1.1.1(a) and (b), for auxiliary boilers for essential services or boilers supplying steam for heating heavy fuel oil and cargo oil as specified in 4.4.1.1. Where one feed water pump capable of easily installed and connected is provided, only one feed water pump fitted is For ships of less than 5(1) gross tonnage, only one feed water pump fitted for the above-mentioned auxiliary boilers is acceptable.

16.2.10 Feed water systems for boilers

16.2.10.1 For auxiliary boilers fitted with only one feed water pump as required in 16.2.9, the requirements for provision of two independent feed water systems in 4.4.2.1 may not be applicable.

16.2.11 Cooling water pimps

16.2.11.1 For ships as specified in 16.1.1.1(a) and (b), the standby cooling water pump as required in 4.5.1.1 may be substituted by other pump of sufficient discharge capacity or a complete spare pump capable of being installed and connected.
For cargo ship of less than 500 gross tonnage the standby pump as required in 4.5.1.1 may be dispensed with.

For ships having two or more main engines, each with its own cooling water pump as required in 4.5.1.1 one complete spare pump to be fitted is acceptable. As for cargo ships of less than 500 gross tonnage, this requirement may not be applicable.

16.2.12 Lubricating oil pumps

16.2.12.1 For ships intended for navigating in restricted service, where the power of single main engine is less than 44OkW, the standby pump as required in 4.6.1.1 may be dispensed with.

16.2.13 Bilge lines of oil tankers

16.2.13.1 For oil tankers of less than 150 gloss tonnage, the cargo pump room bilge specified in 5.3.2.1 may be drained by means of a hand pump having a 50 mm bore suction.

16.2.14 Gearing

16.2.14.1 For ships intended for navigating in restricted service, and the input equal to or less than 44O kW, for the transmission gearing with separately circulated lubricating systems as required in 10.3.10.4, the requirement for one standby lubricating oil pump may be dispensed with.

16.2.15 Steering gear

16.2.15.1 Low level alarm of circulating oil tanks and storage tanks for steering gear hydraulic systems. For ships as defined in 16.1.1.1(a) and (b) (excluding oil tankers, chemical carriers, liquefied gas carriers), the requirements in 13.1.6.9(b) and (c) may not be applicable.

16.2.15.2 Arrangement of control systems of steering gears. For ships as defined in 16.1.1.1(a) and (b), the requirements in 13.1.8.5(e) may be not applicable.

16.2.15.3 Alternative power supply for steering gear. For ships navigating for sheltered water service, the requirements in 13.1.9.1 may not be applicable.

16.2.15.4 Alarm for short circuit protection and failure of electrical power supply: For ships as specified in 16.1.1.1(a) and (b), only alarms for short circuit protection and failure of electrical power supply are fitted as required in 13.1.10.2.

16.2.16 Spare parts

16.2.16.1 For ships the requirements of 16.1.1 apply, the spare parts for machinery installations are to comply with the provisions in Tables 16.2.16.1(1) to 16.2.16.1(6).

Table 16.2.16.1(1)

Spare parts for main diesel engines

Item	Spare parts	Number required
Main thrust block	Pads for one face of Michell type thrust block or inner and outer race with rollers where roller thrust bearings are fitted	1 set
Cylinder valves	Exhaust valves, complete with casings, scats, springs and other fittings for one cylinder	1 set
	Air inlet valves, complete with casings, scats, springs and other fittings for one cylinder	1 set
	Starting air valve, complete with casing, scat, springs and fittings	1 set
	Relief valve, complete	1
	Fuel valves of each size and type fitted, complete with all fittings for one engine	1/4 set
sealing filling pieces and packings	Special purpose sealing filling pieces and packings of each size and type for one cylinder cover and one cylinder liner	1set

Note: For power installations of multi-engines, the number required is to be at least that for one engine

Table 16.2.16.1(2)

Spare parts for main and auxiliary steam turbines

Item	Spare parts	Number required
Turbine thrust	Pads of each size for one face of Michell type thrust of rings for turbine adjusting block, of each size fitted one engine assorted liners for one block where fitted	1 set
Main thrust block*	Pads for one face of Michell type thrust block, or	1 set
	Inner and outer race with rollers where roller thrust bearings are fitted	1

Note:

1. For power installations of multi-engines, the number required is to be at least that for one engine.
2. Where the number of generating sets is more than that required in the rules, spare parts for auxiliary steam turbines may be dispenaed with.
3. "*" means that this requirement applies only to main steam turbines.

Table 16.2.16.1(3)

Spare parts for independently driven air compressors

Item	Spare parts	Number required
Piston rings	Rings, of each size fitted, for one piston	1 set
Valves	Suction and delivery valves, complete, of each size fitted	1/2 set

Note: Where the number of air compressors is greater than that required in the Rules, spare parts are not needed

Table 16.2.16.1(4)

Spare parts for main boilers and auxiliary boilers for essential services

Item	Spare parts	Number required
Tube stoppers or plugs	Tube stoppers or plugs, of each size, for boiler, superheater and economizer tubes	6 sets
Oil fuel bumers	Oil fuel bumers, complete, for one	1 set
Gauge glasses	Gauge glasses of round type	4 sets
	Gauge glasses of flat type	2 sets

Table 16.2.16.1 (5)

Spare parts for Pumps

Item	Spare parts	Number required
Reciprocating	Valves with seats and springs of each size fitted	1 set
	Piston rings of each type and size for one piston	1 set
Centrifugal pumps	Bearings of each type and size	1
	Rotor sealings of each type and size	1
Gear and srew type pumps	Bearings of each type and size	1
	Rotor sealings of each type and size	1

Note: Where a system to be fitted with only one pump, one standby pump with sufficient capacity is provided spare parts may not be needed.

Table 16.2.16.1 (6)
Spare parts for shafting

Item	Spare parts	Number required
Coupling bolts	Coupling bolts and nuts which are to be disconnected for withdrawing the shaft	1 set